Planning/Zoning Application

Planning & Zoning Department

Submitted On:
Mar 3, 2024, 05:58PM EST

Parcel Number: (Include ALL parcels)	WD-905, WD-934
Nearest property address to the project site:	**Street Address:** 100 Grant Street **City:** De Pere **State:** WI **Zip:** 54115
Check each project type that is being applied for:	Site Plan
Current De Pere Zoning Districts:	PI-1
Existing Site Land Uses:	Commercial
Proposed Site Land Uses:	Commercial
Does the project comply with the Comprehensive Plan?	Yes
Has City Staff been contacted for a pre-consultation meeting?	Yes
Property Owner:	**First Name:** St. Norbert College **Last Name:** St Norbert College
Is the property owner's address the same as the nearest property address?	Yes
Property Owner's Phone Number:	920-255-1200
Property Owner's Email Address:	chris.dahlke@snc.edu
Is someone processing the project for the property owner as their authorized representative?	No
Please attach a PDF copy of the site plan.	Combined Site Plan.pdf
Would you like a basic checklist of information to include in the site plan?	Yes
How do you plan on paying for your application?	Online with a credit card
Total Due:	$350.00

Signature Data	First Name: Patrick Last Name: Kuehl Email Address: pkuehl@releeinc.com Signed at: March 3, 2024 5:55pm America/New_York
User's Session Information	IP Address: 74.135.209.84 Referrer URL:

CITY OF DE PERE

335 South Broadway, De Pere, WI 54115 | www.de-pere.org

April 25, 2024

Chris Dahlke
St. Norbert College
100 Grant ST
De Pere, WI 54115

RE: Site Plan Review for the New St. Norbert College – Schneider School of Business at 290 Reid ST (Parcel WD-934)

Dear Chris:

Thank you for the revised site plan for the New St. Norbert College – Schneider School of Business at 290 Reid ST. The City of De Pere staff reviewed the site plan on April 25, 2024, and recommended approval, with the following condition that must be addressed prior to submitting a request for occupancy permits:

- Record drawings and a final walkthrough will be required prior to acceptance of the storm water treatment facilities.
- The developer will need to complete the storm water maintenance agreement for the new treatment facilities. The City engineering staff will send a draft to the developer to finalize.
- After landscaping is installed, provide a statement from the landscaper that verifies that all landscaping has been installed according to the approved landscaping plan to minimize delays or violations related to this topic.
- After the exterior lighting is installed, provide a statement from the installer that the light spill from the property does not exceed the approved photometric plan.

You may now proceed to the Inspection Division to begin the process of obtaining permits. Should you have any questions regarding the decision or require further information, feel free to contact me at 339-4043 or pschleinz@deperewi.gov.

Sincerely,

Peter Schleinz
Senior Planner | Zoning Administrator

cc: Daniel J. Lindstrom, AICP, Development Services Director
Dennis Jensen, Senior Building Inspector

ST. NORBERT COLLEGE - SCHOOL OF BUSINESS
WORKSHOP ARCHITECTS
CITY OF DE PERE, BROWN COUNTY, WISCONSIN

WISCONSIN
PATRICK KUEHL
33076
SHERWOOD, WISCONSIN
PROFESSIONAL ENGINEER

April 22, 2024

ATTENTION!
DOWNLOADED PLANS ARE NOT SCALEABLE, NEITHER THE OWNER OR THE ENGINEER SHALL BE HELD RESPONSIBLE FOR THE SCALE OR PRINT QUALITY OF DOWNLOADED PLANS. ONLY PRINTED PLANS FROM BLUE PRINT SERVICE CO., INC. SHALL BE CONSIDERED TO BE SCALEABLE PLANS.

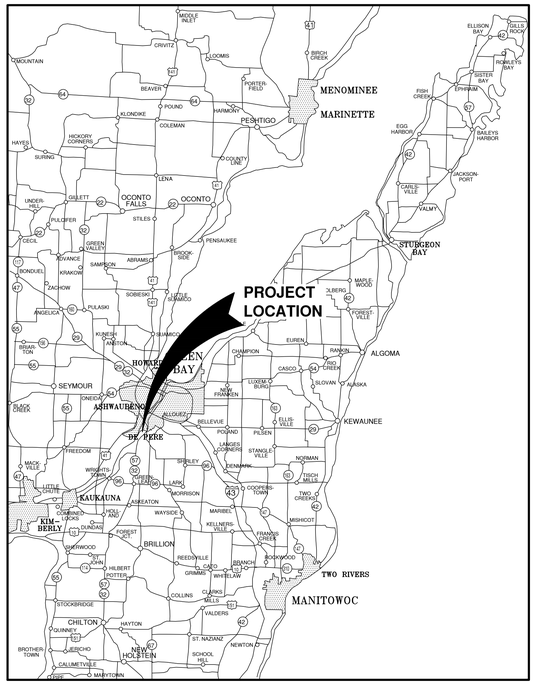

VICINITY MAP

NOTE:
EXISTING UTILITIES SHOWN ON PLANS ARE APPROXIMATE. THE CONTRACTOR SHALL BE RESPONSIBLE FOR OBTAINING EXACT LOCATIONS AND ELEVATIONS OF ALL UTILITIES, WHETHER SHOWN OR NOT, FROM THE OWNERS OF THE RESPECTIVE UTILITIES. ALL UTILITY OWNERS SHALL BE NOTIFIED FOR LOCATES BY THE CONTRACTOR 72 HOURS PRIOR TO EXCAVATION.

NOTE:
ALL EROSION CONTROL MEASURES SHALL BE IN PLACE PRIOR TO CONSTRUCTION AND SHALL CONFORM TO THE WISCONSIN DEPARTMENT OF NATURAL RESOURCES CONSTRUCTION SITE EROSION CONTROL AND TECHNICAL STANDARDS.

INDEX TO DRAWINGS

SHT. NO.	DESCRIPTION
C	LOCATION MAPS AND INDEX TO DRAWINGS
C001	GENERAL NOTES
C100	EXISTING SITE / DEMOLITION PLAN
C101	SITE PLAN
C102	UTILITY PLAN
C103	GRADING PLAN - CONTOURS
C104	GRADING PLAN - SPOT ELEVATIONS
C105	EROSION CONTROL PLAN
C106	MISCELLANEOUS DETAILS
C107	MISCELLANEOUS DETAILS
C108	MISCELLANEOUS DETAILS
C109	EROSION CONTROL - INLET PROTECTION TYPES A, B, C AND D
C110	EROSION CONTROL - INLET PROTECTION TYPE D-HR AND TYPE D-M
C111	EROSION CONTROL - SHEET FLOW DETAILS
C112	EROSION CONTROL - TRACKOUT CONTROL DETAILS
C113	EROSION CONTROL - EROSION MAT SLOPE APPLICATION DETAILS

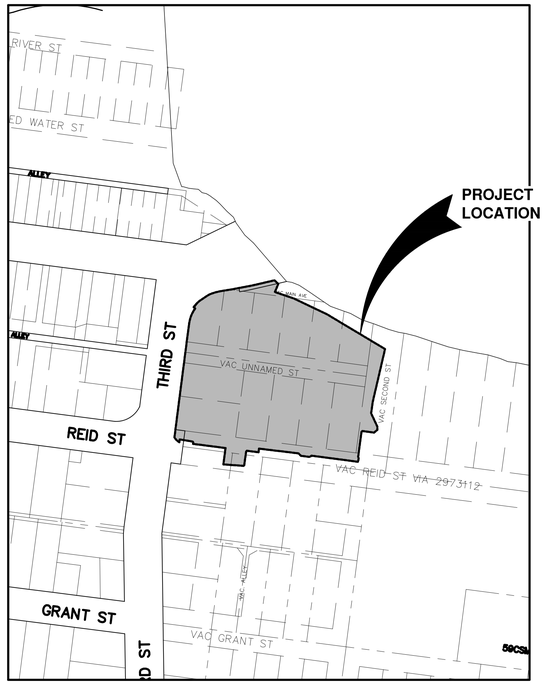

LOCATION MAP

Robert E. Lee & Associates, Inc.
1250 Centennial Centre Blvd | Hobart, WI | 920-662-9641 | releeinc.com

File: BLE4420\E410\E410002\dwg\E410002C.dwg
Plot Date: Feb 23, 2024 - 12:00pm

WORKSHOP ARCHITECTS INC
201 E PITTSBURGH AVE #301
MILWAUKEE WI
53204

WORKSHOP ARCHITECTS ARCHITECT
201 E PITTSBURGH AVENUE #301
MILWAUKEE, WI 53204

ROBERT E LEE & ASSOCIATES CIVIL
1250 CENTENNIAL CENTRE BLVD
HOBART, WI 54155

DAMON FARBER LANDSCAPE
310 S 4TH STREET, STE 7050
MINNEAPOLIS, MN 55415

SPIRE ENGINEERING STRUCTURAL
305 PLANKINGTON AVE, STE 101
MILWAUKEE, WI 53203

RING & DUCHATEAU MECHANICAL
17400 W CAPITOL DR
BROOKFIELD, WI 53045

RING & DUCHATEAU ELECTRICAL
17400 W CAPITOL DR
BROOKFIELD, WI 53045

RING & DUCHATEAU PLUMBING
17400 W CAPITOL DR
BROOKFIELD, WI 53045

RING & DUCHATEAU FIRE PROTECTION
17400 W CAPITOL DR
BROOKFIELD, WI 53045

St. Norbert College
Facilities and Campus Planning

Project Location:
290 REID STREET
DE PERE, WISCONSIN 54115

SCHOOL OF BUSINESS
ST. NORBERT COLLEGE
DE PERE, WISCONSIN 54115

Sheet Title:
LOCATION MAP & INDEX TO DRAWINGS

Revisions:

No.	Date:	By:	Description:

Graphic Scale	AS INDICATED
WSA Number	23-332
Volume Number	
Issued For	100% CDS, BID, & PERMIT
Date Issued	03/04/2024
Sheet Number	C

OWNER INFORMATION:

SAINT NORBERT COLLEGE
100 GRANT STREET
DE PERE, WI 54115

920-255-1200

CONTACT: CHRIS DAHLKE

CONTRACTOR INFORMATION:

MIRON CONSTRUCTION CO., IN C.
1471 MCMAHON DRIVE
NEENAH, WI 54956

920-886-7869

CONTACT: JOEL STAVE

UTILITY INFORMATION:

UTILITIES PRESENT:
CITY OF DE PERE DEPARTMENT OF PUBLIC WORKS, WISCONSIN PUBLIC SERVICE CORP., AT & T, TIME WARNER CABLE, WINDSTREAM COMMUNICATIONS AND BROWN COUNTY TECHNOLOGY.

UTILITIES SHOWN ON THIS MAP ARE BASED ON LOCATES FROM:

DIGGER'S HOTLINE TICKET NUMBER 20232118670, DATED 06/03/2023, VISIBLE OBSERVATION AND RECORD UTILITY PLAN DOCUMENTS. UTILITY LINE LOCATIONS SHOULD BE VERIFIED PRIOR TO ANY DIGGING. THIS SITE MAY CONTAIN BURIED UTILITIES NOT IDENTIFIED ON THIS MAP.

DIGGERS HOTLINE = 1-800-242-8511

WATER/SANITARY/STORM SEWER:
DEPARTMENT OF PUBLIC WORKS
CITY OF DE PERE
925 SIXTH ST.
DE PERE, WI 54155

(920) 339-8076

GAS & ELECTRIC:
WISCONSIN PUBLIC SERVICE CORP.
700 N. ADAMS ST.
GREEN BAY, WI 54307

(800) 797-7434

TELECOMMUNICATIONS:
AT & T / SBC
205 S. JEFFERSON ST.
GREEN BAY, WI 54301

(920) 433-4147

TELECOMMUNICATIONS:
TIME WARNER CABLE
2580 W. MASON ST.
GREEN BAY, WI 54303

(920) 944-1581

TELECOMMUNICATIONS:
WINDSTREAM COMMUNICATIONS
4001 RODNEY PARHAM RD.
LITTLE ROCK, AR 72212

(501) 748-7000

TELECOMMUNICATIONS:
BROWN COUNTY TECHNOLOGY
111 N. JEFFERSON ST.
GREEN BAY, WI 54301

(920) 448-6266

DIGGERS HOTLINE
Dial 811 or (800) 242-8511
www.DiggersHotline.com

TO OBTAIN LOCATION OF PARTICIPANTS UNDERGROUND FACILITIES BEFORE YOU DIG IN WISCONSIN

WIS. STATUTE 182.0175 (1974) REQUIRES MIN. OF 3 WORK DAYS NOTICE BEFORE YOU EXCAVATE.

LEGEND

- FIRE HYDRANT
- WATER VALVE/CURB STOP
- WATER MANHOLE
- REDUCER/INCREASER
- SANITARY MANHOLE
- AIR RELIEF MANHOLE
- STORM MANHOLE
- OPEN STORM MANHOLE
- STORM INLET
- STORM INLET MANHOLE
- TANK COVER
- SOIL BORING
- POST
- IRON PIPE/ROD
- PK NAIL
- POWER POLE
- POWER POLE W/GUY WIRE
- LIGHT POLE
- TRAFFIC SIGNAL POLE
- ELECTRIC MANHOLE
- ELECTRIC METER
- TELEPHONE MANHOLE
- TELEPHONE PEDESTAL
- CABLE TV MANHOLE
- CABLE TV PEDESTAL
- GAS VALVE
- GAS METER
- MAILBOX
- SIGN
- BOLLARD
- DECIDUOUS TREE
- CONIFEROUS TREE
- BUSH
- RIP RAP
- CULVERT
- WETLANDS
- HANDICAP PARKING

- EDGE OF ASPHALT
- EDGE OF GRAVEL
- CURB & GUTTER
- TREE/BRUSH LINE
- 750 CONTOUR LINE
- RETAINING WALL
- GUARD RAIL
- FENCE

- 8SS — SANITARY SEWER (SIZE NOTED)
- 4FM — FORCEMAIN (SIZE NOTED)
- 10ST — STORM SEWER (SIZE NOTED)
- 6W — WATERMAIN (SIZE NOTED)
- G — GAS LINE
- OT — OVERHEAD TELEPHONE LINE
- T — UNDERGROUND TELEPHONE LINE
- OE — OVERHEAD ELECTRIC LINE
- E — UNDERGROUND ELECTRIC LINE
- OTV — OVERHEAD CABLE TV LINE
- TV — CABLE TV LINE
- FO — FIBER OPTIC LINE
- R/W LINE
- PROPERTY LINE
- EASEMENT LINE
- BUILDING SETBACK LINE
- SECTION LINE

GR.	GRAVEL	WM	WATERMAIN	VPC	VERTICAL POINT OF CURVATURE	B-B	BACK TO BACK (OF CURB)
BIT.	BITUMINOUS	HYD.	HYDRANT	VPI	VERTICAL POINT OF INTERSECTION	F-F	FACE TO FACE (OF CURB)
ASPH	ASPHALT	WV	WATER VALVE	VPT	VERTICAL POINT OF TANGENCY	R/W	RIGHT OF WAY
CONC	CONCRETE	SAN	SANITARY SEWER	PC	POINT OF CURVATURE	T/C	TOP OF CURB
SW	SIDEWALK	MH	MANHOLE	PI	POINT OF INTERSECTION	F/L	FLOW LINE
BLDG	BUILDING	ST	STORM SEWER	PT	POINT OF TANGENCY	C/L	CENTERLINE
HSE	HOUSE	CB	CATCH BASIN	R	RADIUS	R/L	REFERENCE LINE
PED	PEDESTAL	TELE	TELEPHONE	EX	EXISTING	INV	INVERT
PP	POWER POLE	ELEC	ELECTRIC	PR	PROPOSED	CMP	CORRUGATED METAL PIPE
LP	LIGHT POLE	TV	TELEVISION	EOR	END OF RADIUS	RCP	REINFORCED CONCRETE PIPE
BM	BENCH MARK	STA.	STATION	BOC	BACK OF CURB	CULV	CULVERT

WORKSHOP ARCHITECTS LLC
201 E PITTSBURGH AVE #301
MILWAUKEE WI
53204

WORKSHOP ARCHITECTS — ARCHITECT
201 E PITTSBURGH AVENUE #301
MILWAUKEE, WI 53204

ROBERT E LEE & ASSOCIATES — CIVIL
1250 CENTENNIAL CENTRE BLVD
HOBART, WI 54155

DAMON FARBER — LANDSCAPE
310 S 4TH STREET, STE 7050
MINNEAPOLIS, MN 55415

SPIRE ENGINEERING — STRUCTURAL
305 PLANKINGTON AVE, STE 101
MILWAUKEE, WI 53203

RING & DUCHATEAU — MECHANICAL
17400 W CAPITOL DR
BROOKFIELD, WI 53045

RING & DUCHATEAU — ELECTRICAL
17400 W CAPITOL DR
BROOKFIELD, WI 53045

RING & DUCHATEAU — PLUMBING
17400 W CAPITOL DR
BROOKFIELD, WI 53045

RING & DUCHATEAU — FIRE PROTECTION
17400 W CAPITOL DR
BROOKFIELD, WI 53045

St. Norbert College
Facilities and Campus Planning

Project Location:
230 REID STREET
DE PERE, WISCONSIN 54115

SCHOOL OF BUSINESS
ST. NORBERT COLLEGE
DE PERE, WISCONSIN 54115

Sheet Title:
GENERAL NOTES

Revisions:

No.	Date:	By:	Description:

FOR REFERENCE ONLY

Graphic Scale	AS INDICATED
WSA Number	23-332
Volume Number	
Issued For	100% CDS, BID, & PERMIT
Date Issued	03/04/2024
Sheet Number	C001

File: R:\6400\6410\6410002\dwg\6410002i.dwg
Plot Date: Feb 23, 2024 - 11:58am

BENCHMARK	BENCHMARK ESTABLISHED BY: ROBERT E. LEE & ASSOCIATES, INC. FIELD VERIFY BENCHMARKS FOR ACCURACY.	
NO.	DESCRIPTION	EL.
1	PK IN STUMP	600.96
2	TAG BOLT ON HYDRANT	606.35
3	TAG BOLT ON HYDRANT	599.59

LEGEND

- TO BE DEMOLISHED
- TREE/SHRUB TO BE REMOVED
- SAWCUT REQ'D

DEMOLITION NOTES

1. EXISTING ASPHALT AND BASE COURSE MAY BE PULVERIZED AND STOCKPILED ON SITE FOR FUTURE USE.
2. EXISTING GAS, ELECTRIC, CABLE TELEVISION AND TELEPHONE TO BE REMOVED AND/OR RELOCATED BY OTHERS. WORK SHALL BE COORDINATED BY GENERAL CONTRACTOR.
3. ALL MISCELLANEOUS STRUCTURES SHALL BE REMOVED.
4. DRIVEWAY OPENINGS SHALL BE REMOVED AND CURB OPENINGS SHALL BE CLOSED IN ACCORDANCE WITH STANDARD DETAIL "CURB REMOVAL", SEE DETAIL SHEETS.

GENERAL NOTES

1. EXISTING SITE CONDITIONS ARE APPROXIMATE IN VICINITY OF FORMER PAC BUILDING. CONTRACTOR SHALL VERIFY ELEVATIONS AND SITE CONDITIONS UPON COMPLETION OF DEMOLITION.

201 E PITTSBURGH AVE #301
MILWAUKEE WI
53204

WORKSHOP ARCHITECTS — ARCHITECT
201 E PITTSBURGH AVENUE #301
MILWAUKEE, WI 53204

ROBERT E LEE & ASSOCIATES — CIVIL
1250 CENTENNIAL CENTRE BLVD
HOBART, WI 54155

DAMON FARBER — LANDSCAPE
310 S 4TH STREET, STE 7050
MINNEAPOLIS, MN 55415

SPIRE ENGINEERING — STRUCTURAL
305 PLANKINGTON AVE, STE 101
MILWAUKEE, WI 53203

RING & DUCHATEAU — MECHANICAL
17400 W CAPITOL DR
BROOKFIELD, WI 53045

RING & DUCHATEAU — ELECTRICAL
17400 W CAPITOL DR
BROOKFIELD, WI 53045

RING & DUCHATEAU — PLUMBING
17400 W CAPITOL DR
BROOKFIELD, WI 53045

RING & DUCHATEAU — FIRE PROTECTION
17400 W CAPITOL DR
BROOKFIELD, WI 53045

St. Norbert College
Facilities and Campus Planning

Project Location:
290 REID STREET
DE PERE, WISCONSIN 54115

SCHOOL OF BUSINESS
ST. NORBERT COLLEGE
DE PERE, WISCONSIN 54115

Sheet Title:
EXISTING SITE/DEMOLITION PLAN

Revisions:

No.	Date:	By:	Description:

FOR REFERENCE ONLY

Graphic Scale	AS INDICATED
WSA Number	23-332
Volume Number	
Issued For	100% CDS, BID, & PERMIT
Date Issued	03/04/2024
Sheet Number	C100

File: R:\6400\6410\6410002\dwg\6410002I.dwg
Plot Date: Apr 21, 2024 - 9:06pm

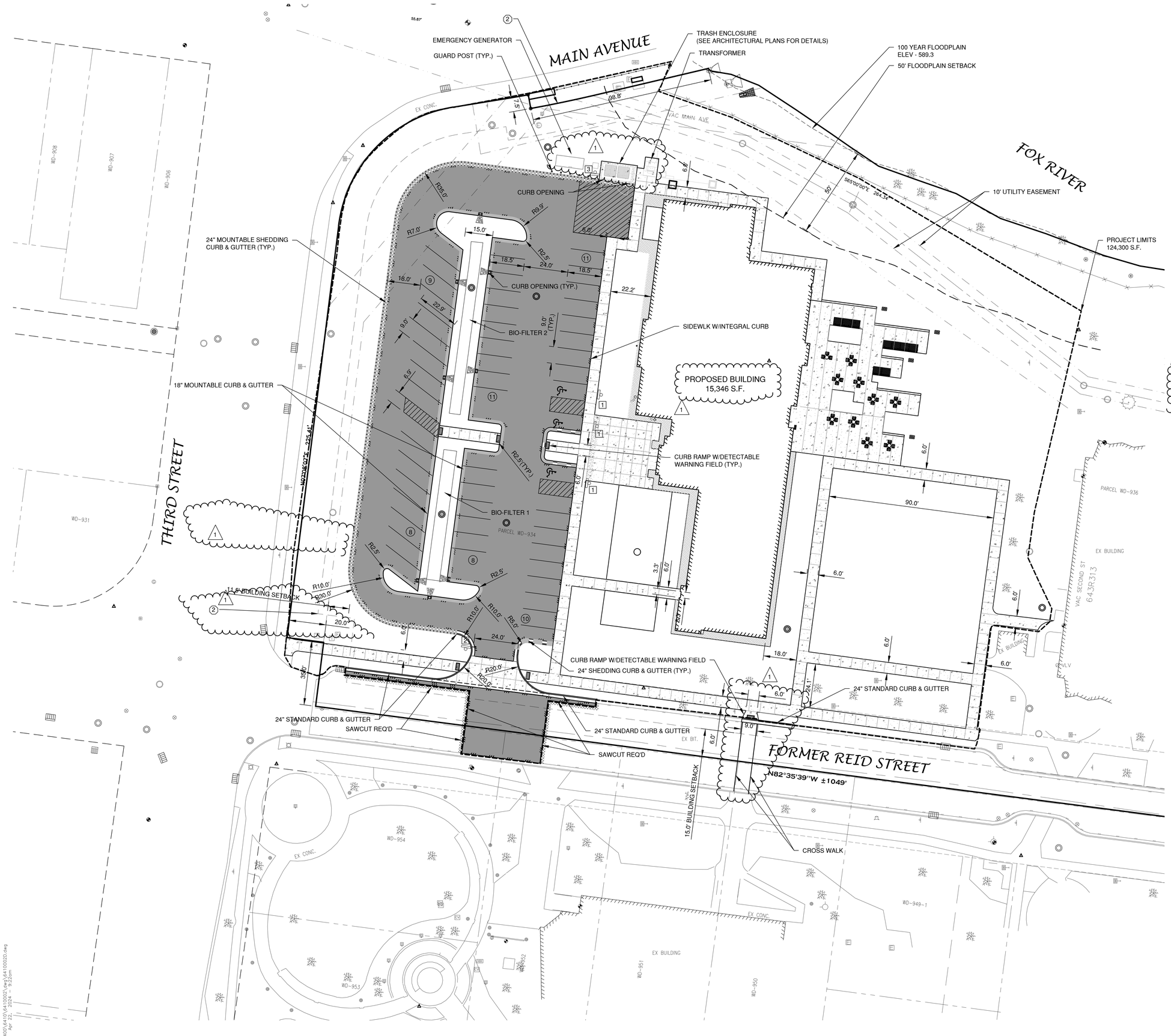

LEGEND

- CONCRETE PAVEMENT
- ASPHALT PAVEMENT (HEAVY)
- LANDSCAPE AREA
- PROPOSED 24" STANDARD CURB AND GUTTER
- PROPOSED 24" STANDARD SHEDDING CURB AND GUTTER
- PROPOSED 18" MOUNTABLE CURB AND GUTTER
- PROPOSED 24" MOUNTABLE SHEDDING CURB AND GUTTER
- TRAFFIC FLOW ARROW
- HANDICAPPED PARKING
- (12) INDICATES NUMBER OF PARKING STALLS

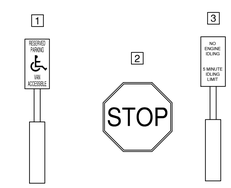

*NOTE:
1. ALL DIMENSIONS ARE TO THE FACE OF CURB, UNLESS NOTED OTHERWISE.
2. NO DRIVEWAY ACCESS IS ALLOWED TO THIRD STREET OR MAIN AVENUE NORTH OF REID STREET.
3. PARKING REQUIREMENTS PER OWNERS APPROVED MASTER PLAN.

NOTE

SEE LANDSCAPING PLANS FOR SEEDING & PLANTING DETAILS

PARKING DATA

TOTAL PARKING STALLS PROVIDED = 57

HANDICAP ACCESSIBLE PARKING STALLS = 3

SITE DATA (PROJECT LIMITS)

	EXISTING	PROPOSED
BUILDING AREA:	0 S.F.	15,346 S.F.
PAVED AREA:	24,532 S.F.	45,757 S.F.
GREEN SPACE:	99,768 S.F.	63,197 S.F.
TOTAL:	124,300 S.F.	124,300 S.F.

ZONING

PI-2

CONSTRUCTION CLASSIFICATION

III-B

PARCEL NO.

WD-934

OWNER INFORMATION

ST NORBERT COLLEGE
100 GRANT STREET, DE PERE, WI 54115
ATTN: CHRIS DAHLKE
PHONE: (920) 255-1200

NORTH

0' 20' 40'
SCALE IN FEET

PRELIMINARY
Not for Construction

WORKSHOP ARCHITECTS LLC
201 E PITTSBURGH AVE #301
MILWAUKEE WI
53204

WORKSHOP ARCHITECTS ARCHITECT
201 E PITTSBURGH AVENUE #301
MILWAUKEE, WI 53204

ROBERT E LEE & ASSOCIATES CIVIL
1250 CENTENNIAL CENTRE BLVD
HOBART, WI 54155

DAMON FARBER LANDSCAPE
310 S 4TH STREET, STE 7050
MINNEAPOLIS, MN 55415

SPIRE ENGINEERING STRUCTURAL
305 PLANKINGTON AVE, STE 101
MILWAUKEE, WI 53203

RING & DUCHATEAU MECHANICAL
17400 W CAPITOL DR
BROOKFIELD, WI 53045

RING & DUCHATEAU ELECTRICAL
17400 W CAPITOL DR
BROOKFIELD, WI 53045

RING & DUCHATEAU PLUMBING
17400 W CAPITOL DR
BROOKFIELD, WI 53045

RING & DUCHATEAU FIRE PROTECTION
17400 W CAPITOL DR
BROOKFIELD, WI 53045

St. Norbert College
Facilities and Campus Planning

Project Location:
280 REID STREET
DE PERE, WISCONSIN 54115

SCHOOL OF BUSINESS
ST. NORBERT COLLEGE
DE PERE, WISCONSIN 54115

Sheet Title:
SITE PLAN

Revisions:

No.	Date:	By:	Description:
1	04/01/2024	PHK	ADDENDUM 1

FOR REFERENCE ONLY

Graphic Scale	AS INDICATED
WSA Number	23-332
Volume Number	
Issued For	100% CDS, BID, & PERMIT
Date Issued	03/04/2024
Sheet Number	C101

File: R:\6400\6410\6410002\dwg\6410002D.dwg
Plot Date: Apr 22, 2024 - 9:22am

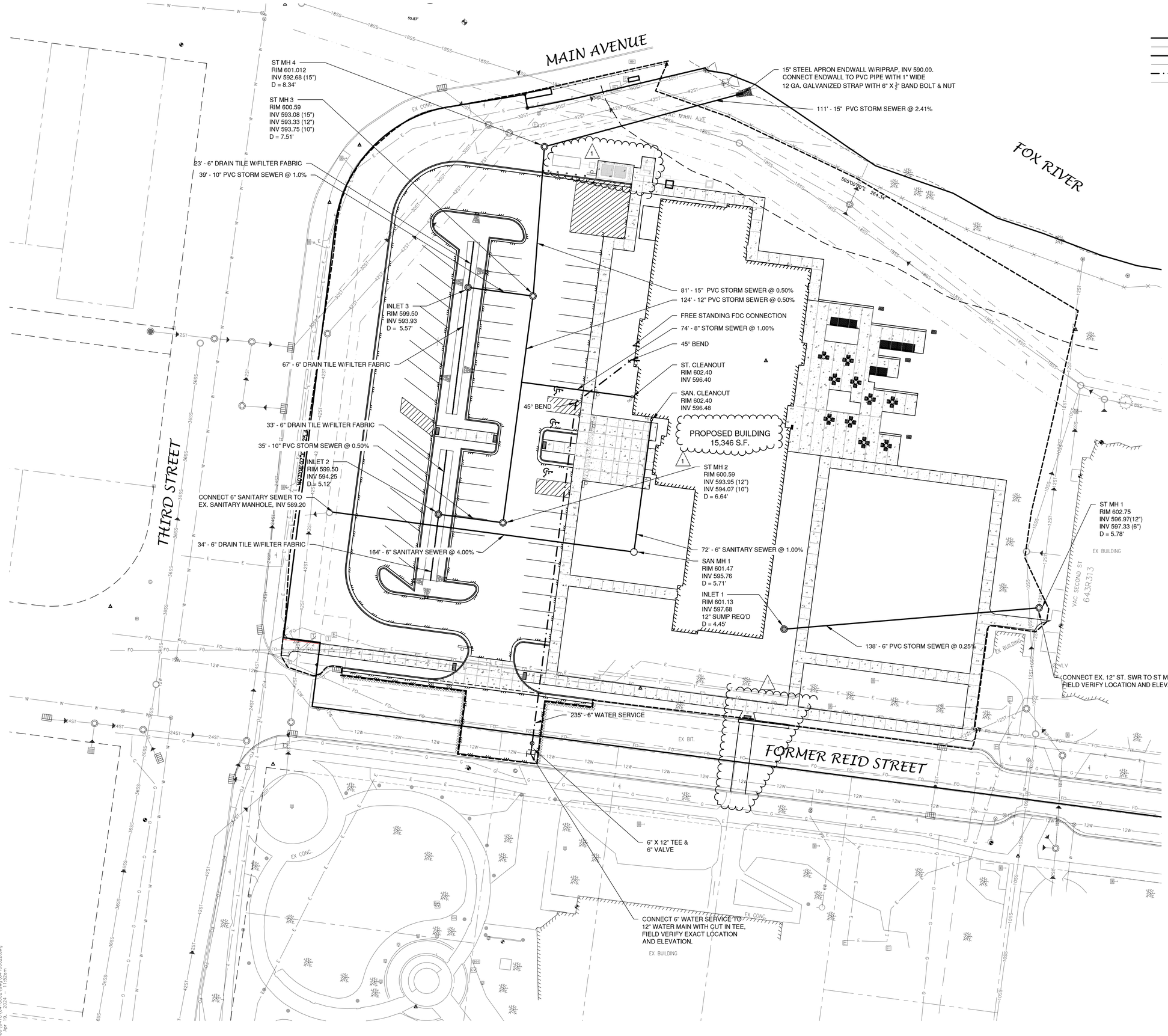

LEGEND

- PROPOSED SANITARY SEWER
- 8SS — EXISTING SANITARY SEWER (SIZE NOTED)
- PROPOSED STORM SEWER
- 10ST — EXISTING STORM SEWER (SIZE NOTED)
- PROPOSED WATERMAIN
- 6W — EXISTING WATERMAIN (SIZE NOTED)

PROPOSED	EXISTING	
		FIRE HYDRANT
		WATER VALVE/CURB STOP
		WATER MANHOLE
		REDUCER/INCREASER
		SANITARY MANHOLE
		LIFT STATION
		TRACER WIRE SIGNAL CONNECTION BOX
		CLEANOUT
		STORM MANHOLE
		STORM CATCH BASIN
		STORM INLET
		STORM INLET MANHOLE
		YARD DRAIN
		STANDPIPE
		ROOF DOWNSPOUT
		DISCHARGE STRUCTURE

PLUMBING DATA

DRAINAGE FIXTURE UNITS = 183
WATER FIXTURE UNITS = 170

NOTE

1. A MINIMUM OF 6.5 FEET OF COVER SHALL BE MAINTAINED OVER ALL WATERMAIN.
2. SANITARY SEWER, WATERMAIN AND STORM SEWER SHALL BE CONSTRUCTED IN ACCORDANCE WITH THE STANDARD SPECIFICATIONS FOR SEWER AND WATER CONSTRUCTION IN WISCONSIN AND ADMINISTRATIVE CODE CHAPTERS COMM 81-87.
3. FIELD VERIFY LOCATION OF EXISTING UTILITIES. IF EXISTING LOCATIONS DIFFER FROM WHAT IS INDICATED ON THE PLANS, **CONTACT ENGINEER,** PRIOR TO CONTINUED WORK.
4. ALL SANITARY SEWER, STORM SEWER AND WATER SERVICES / MAINS SHALL BE PROVIDED WITH TRACER WIRE OR OTHER METHOD TO BE LOCATED.
5. EXISTING GAS, ELECTRIC, CABLE TELEVISION AND TELEPHONE TO BE REMOVED AND/OR RELOCATED BY OTHERS. WORK SHALL BE COORDINATED BY GENERAL CONTRACTOR.
6. THE CONTRACTOR SHALL CONTACT THE CITY OF DE PERE WATER DEPARTMENT (920-339-4063) SHALL BE CONTACTED TO PROVIDE ON SITE INSPECTION OF THE INSTALLATION OF THE NEW TEE ON THE WATER MAIN.
7. SANITARY LATERAL SHALL BE PRESSURE TESTED & TELEIVSED PRIOR TO CONNECTING TO EX. MANHOLE.
8. WATER SERVICE SHALL BE PRESSURE TESTED AND A SAFE SAMPLE OBTAINED PRIOR TO PLACING INTO SERVICE.
9. RECORD DRAWINGS AND A FINAL WALK THROUGH OF BIO-FILTERS IS REQUIRED PRIOR TO ACCEPTANCE BY THE CITY.
10. A 2" WATER METER IS REQUIRED FOR THE DOMESTIC WATER SYSTEM.

WORKSHOP ARCHITECTS LTD.
201 E PITTSBURGH AVE #301
MILWAUKEE WI
53204

WORKSHOP ARCHITECTS ARCHITECT
201 E PITTSBURGH AVENUE #301
MILWAUKEE, WI 53204

ROBERT E LEE & ASSOCIATES CIVIL
1250 CENTENNIAL CENTRE BLVD
HOBART, WI 54155

DAMON FARBER LANDSCAPE
310 S 4TH STREET, STE 7050
MINNEAPOLIS, MN 55415

SPIRE ENGINEERING STRUCTURAL
305 PLANKINGTON AVE, STE 101
MILWAUKEE, WI 53203

RING & DUCHATEAU MECHANICAL
17400 W CAPITOL DR
BROOKFIELD, WI 53045

RING & DUCHATEAU ELECTRICAL
17400 W CAPITOL DR
BROOKFIELD, WI 53045

RING & DUCHATEAU PLUMBING
17400 W CAPITOL DR
BROOKFIELD, WI 53045

RING & DUCHATEAU FIRE PROTECTION
17400 W CAPITOL DR
BROOKFIELD, WI 53045

St. Norbert College
Facilities and Campus Planning

Project Location:
280 REID STREET
DE PERE, WISCONSIN 54115

SCHOOL OF BUSINESS
ST. NORBERT COLLEGE
DE PERE, WISCONSIN 54115

Sheet Title:
UTILITY PLAN

Revisions:

No.	Date:	By:	Description:
1	04/01/2024	PHK	ADDENDUM 1

FOR REFERENCE ONLY

Graphic Scale	AS INDICATED
WSA Number	23-332
Volume Number	
Issued For	100% CDS, BID, & PERMIT
Date Issued	03/04/2024
Sheet Number	C102

File: R:\6400\6410\641000\dwg\641000C0.dwg
Plot Date: Apr 19, 2024 - 11:52am

LEGEND

- EXISTING CONTOUR LINE
- PROPOSED CONTOUR LINE
- DRAINAGE SWALE
- DRAINAGE DIVIDE

BIO-FILTER CONSTRUCTION NOTE

CONTRACTOR SHALL CONSTRUCT A TWO FOOT THICK CLAY LINER INSTALLED PER WDNR TECHNICAL STANDARD 1001.

201 E PITTSBURGH AVE #301
MILWAUKEE WI
53204

WORKSHOP ARCHITECTS INC

WORKSHOP ARCHITECTS ARCHITECT
201 E PITTSBURGH AVENUE #301
MILWAUKEE, WI 53204

ROBERT E LEE & ASSOCIATES CIVIL
1250 CENTENNIAL CENTRE BLVD
HOBART, WI 54155

DAMON FARBER LANDSCAPE
310 S 4TH STREET, STE 7050
MINNEAPOLIS, MN 55415

SPIRE ENGINEERING STRUCTURAL
305 PLANKINGTON AVE, STE 101
MILWAUKEE, WI 53203

RING & DUCHATEAU MECHANICAL
17400 W CAPITOL DR
BROOKFIELD, WI 53045

RING & DUCHATEAU ELECTRICAL
17400 W CAPITOL DR
BROOKFIELD, WI 53045

RING & DUCHATEAU PLUMBING
17400 W CAPITOL DR
BROOKFIELD, WI 53045

RING & DUCHATEAU FIRE PROTECTION
17400 W CAPITOL DR
BROOKFIELD, WI 53045

St. Norbert College
Facilities and Campus Planning

Project Location:
290 REID STREET
DE PERE, WISCONSIN 54115

SCHOOL OF BUSINESS
ST. NORBERT COLLEGE
DE PERE, WISCONSIN 54115

Sheet Title:
GRADING PLAN - CONTOURS

Revisions:

No.	Date:	By:	Description:
1	04/01/2024	PHK	ADDENDUM 1

FOR REFERENCE ONLY

Graphic Scale	AS INDICATED
WSA Number	23-332
Volume Number	
Issued For	100% CDS, BID, & PERMIT
Date Issued	03/04/2024
Sheet Number	C103

Plot Date: Apr 19, 2024 – 11:53am

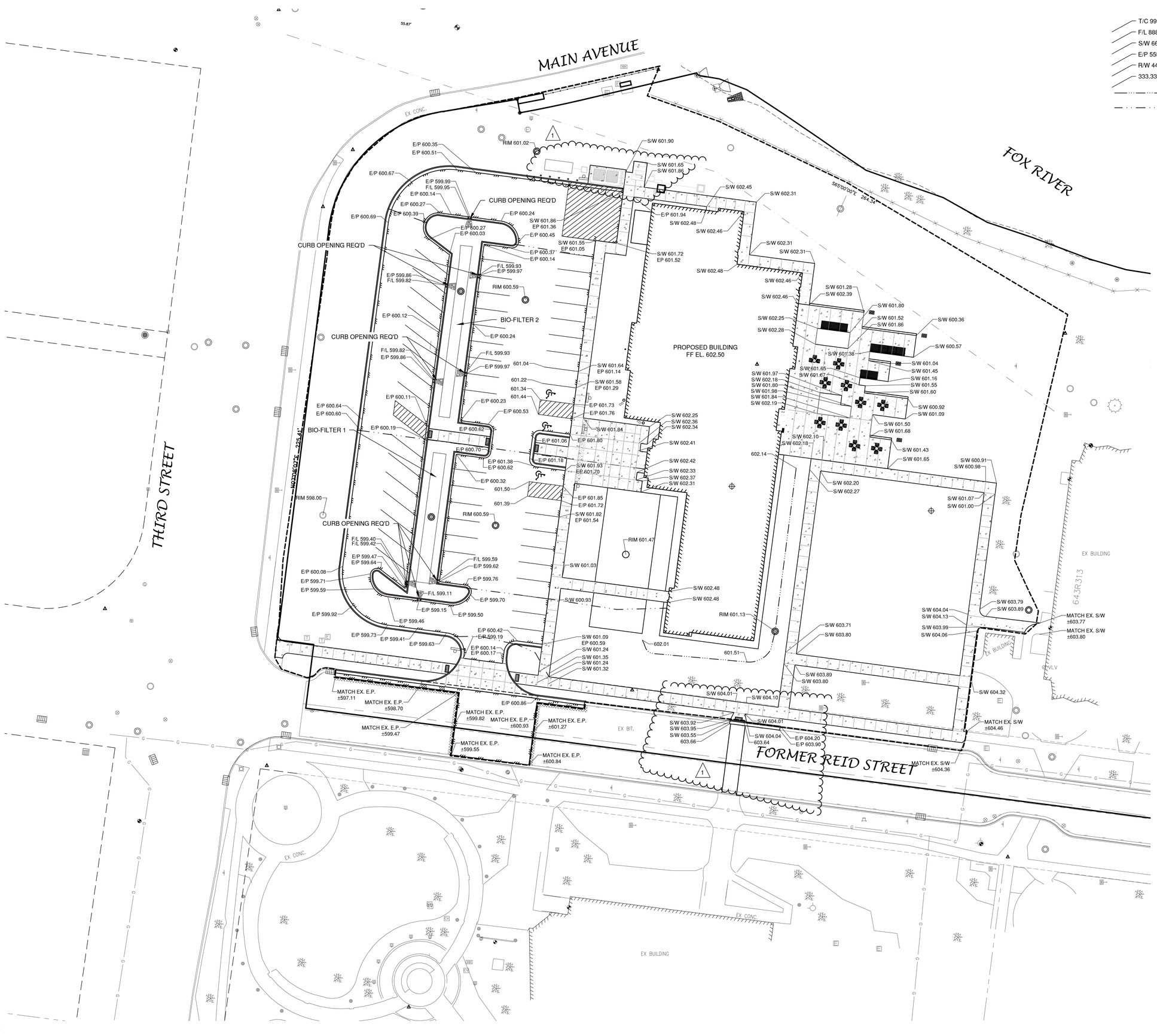

LEGEND

T/C 999.99	TOP OF CURB ELEVATION
F/L 888.88	FLOW LINE ELEVATION
S/W 666.66	TOP OF SIDEWALK ELEVATION
E/P 555.55	EDGE OF PAVEMENT ELEVATION
R/W 444.44	TOP OF RETAINING WALL ELEVATION
333.33	GROUND ELEVATION
	DRAINAGE SWALE
	DRAINAGE DIVIDE

201 E PITTSBURGH AVE #301
MILWAUKEE WI
53204

WORKSHOP ARCHITECTS INC

WORKSHOP ARCHITECTS ARCHITECT
201 E PITTSBURGH AVENUE #301
MILWAUKEE, WI 53204

ROBERT E LEE & ASSOCIATES CIVIL
1250 CENTENNIAL CENTRE BLVD
HOBART, WI 54155

DAMON FARBER LANDSCAPE
310 S 4TH STREET, STE 7050
MINNEAPOLIS, MN 55415

SPIRE ENGINEERING STRUCTURAL
305 PLANKINGTON AVE, STE 101
MILWAUKEE, WI 53203

RING & DUCHATEAU MECHANICAL
17400 W CAPITOL DR
BROOKFIELD, WI 53045

RING & DUCHATEAU ELECTRICAL
17400 W CAPITOL DR
BROOKFIELD, WI 53045

RING & DUCHATEAU PLUMBING
17400 W CAPITOL DR
BROOKFIELD, WI 53045

RING & DUCHATEAU FIRE PROTECTION
17400 W CAPITOL DR
BROOKFIELD, WI 53045

St. Norbert College
Facilities and Campus Planning

Project Location:
280 REID STREET
DE PERE, WISCONSIN 54115

SCHOOL OF BUSINESS
ST. NORBERT COLLEGE
DE PERE, WISCONSIN 54115

Sheet Title:
GRADING PLAN - SPOT ELEVATIONS

Revisions:

No.	Date:	By:	Description:
1	04/01/2024	PHK	ADDENDUM 1

FOR REFERENCE ONLY

Graphic Scale	AS INDICATED
WSA Number	23-332
Volume Number	
Issued For	100% CDS, BID, & PERMIT
Date Issued	03/04/2024
Sheet Number	C104

File: R:\6400\6410\641000\2\dwg\641000C0.dwg
Plot Date: Apr 19, 2024 - 11:53am

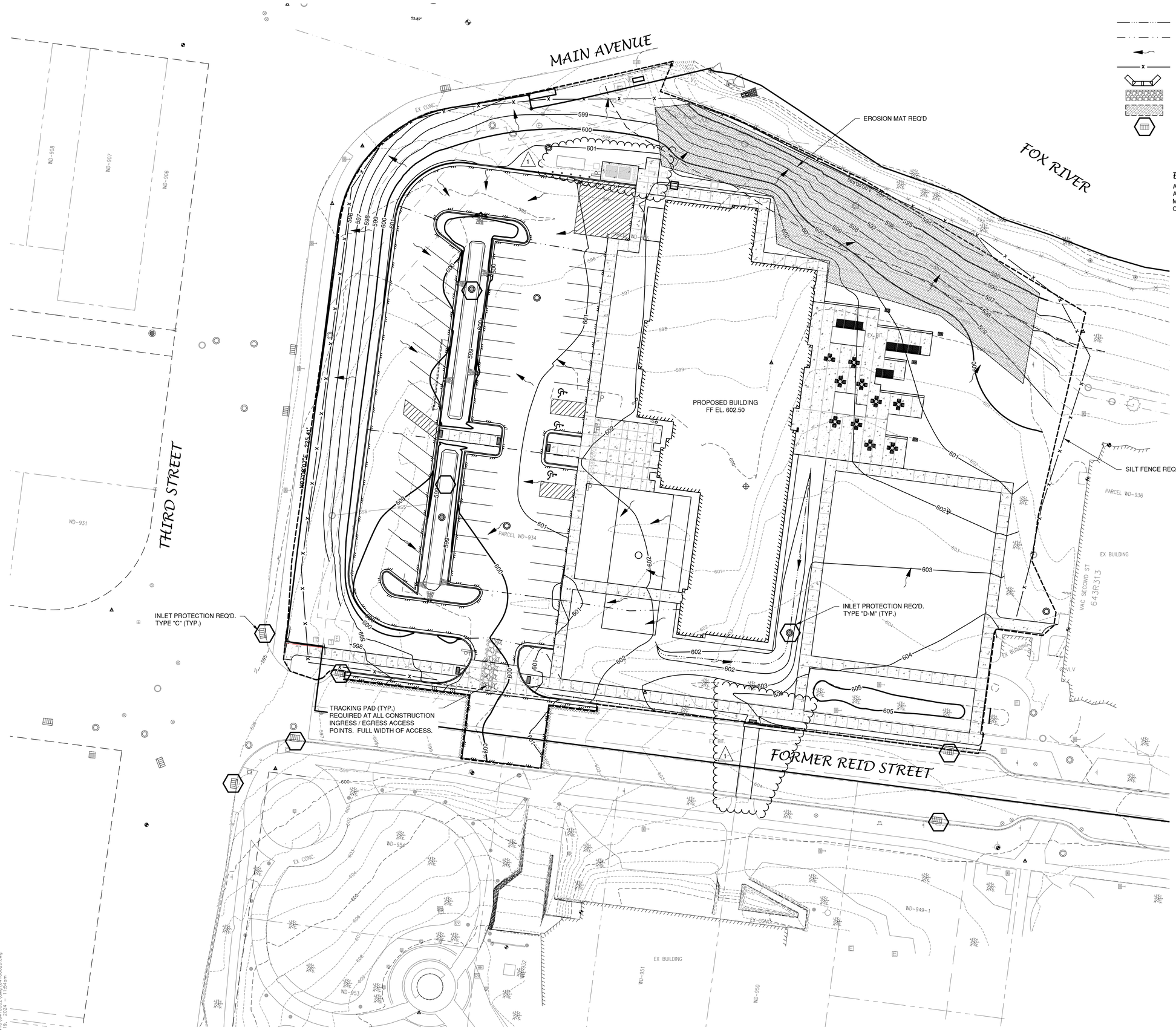

LEGEND

- DRAINAGE SWALE
- DRAINAGE DIVIDE
- FLOW ARROW
- SILT FENCE (PER WDNR TECHNICAL STANDARD 1056)
- DITCH CHECK (PER WDNR TECHNICAL STANDARD 1062)
- TRACKING PAD (PER WDNR TECHNICAL STANDARD 1057)
- EROSION MAT (PER WDNR TECHNICAL STANDARD 1053)
- INLET PROTECTION (PER WDNR TECHNICAL STANDARD 1060)

EROSION CONTROL

ALL EROSION CONTROL PRACTICES INDICATED ON THIS PLAN ARE APPROXIMATE LOCATIONS ONLY. THE ACTUAL SITE MAY REQUIRE MORE OR LESS EROSION CONTROL DEPENDING ON THE CURRENT CONDITION OF THE SITE.

1. SILT FENCE IS REQUIRED DOWNSLOPE OF ANY DISTURBED LAND THAT MAY CARRY SEDIMENTS OFF SITE.
2. A TRACKING PAD IS REQUIRED AT ANY INGRESS/EGRESS LOCATION, WHERE SEDIMENT MAY BE TRACKED OFF-SITE.
3. PROPER INLET PROTECTION SHALL BE USED DEPENDING ON THE INLET TYPE.
4. ALL NECESSARY SITE DEWATERING SHALL BE PERFORMED IN ACCORDANCE WITH WDNR TECHNICAL STANDARD 1061.

201 E PITTSBURGH AVE #301
MILWAUKEE WI
53204

WORKSHOP ARCHITECTS — ARCHITECT
201 E PITTSBURGH AVENUE #301
MILWAUKEE, WI 53204

ROBERT E LEE & ASSOCIATES — CIVIL
1250 CENTENNIAL CENTRE BLVD
HOBART, WI 54155

DAMON FARBER — LANDSCAPE
310 S 4TH STREET, STE 7050
MINNEAPOLIS, MN 55415

SPIRE ENGINEERING — STRUCTURAL
305 PLANKINGTON AVE, STE 101
MILWAUKEE, WI 53203

RING & DUCHATEAU — MECHANICAL
17400 W CAPITOL DR
BROOKFIELD, WI 53045

RING & DUCHATEAU — ELECTRICAL
17400 W CAPITOL DR
BROOKFIELD, WI 53045

RING & DUCHATEAU — PLUMBING
17400 W CAPITOL DR
BROOKFIELD, WI 53045

RING & DUCHATEAU — FIRE PROTECTION
17400 W CAPITOL DR
BROOKFIELD, WI 53045

St. Norbert College
Facilities and Campus
Planning

Project Location:
200 REID STREET
DE PERE, WISCONSIN 54115

SCHOOL OF BUSINESS
ST. NORBERT COLLEGE
DE PERE, WISCONSIN 54115

Sheet Title:
EROSION CONTROL PLAN

Revisions:

No.	Date:	By:	Description:
1	04/01/2024	PHK	ADDENDUM 1

FOR REFERENCE ONLY

Graphic Scale	AS INDICATED
WSA Number	23-332
Volume Number	
Issued For	100% CDS, BID, & PERMIT
Date Issued	03/04/2024
Sheet Number	C105

File: R:\6400\6410\641000D\dwg\641000D.dwg
Plot Date: Apr 19, 2024 - 11:54am

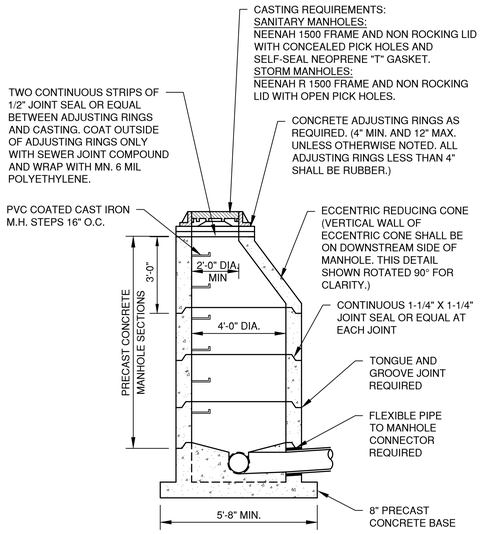

SANITARY AND STORM STANDARD MANHOLE
8"-24" (INCLUSIVE)

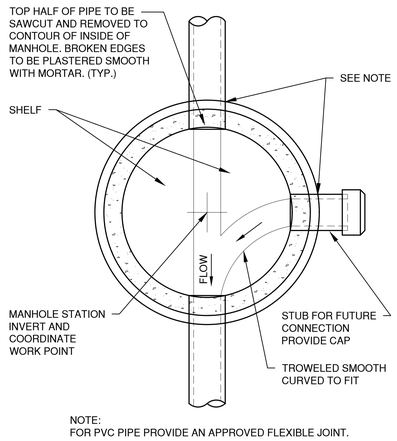

NOTE:
FOR PVC PIPE PROVIDE AN APPROVED FLEXIBLE JOINT.

MANHOLE BASE PLAN
8" - 60" (INCLUSIVE)

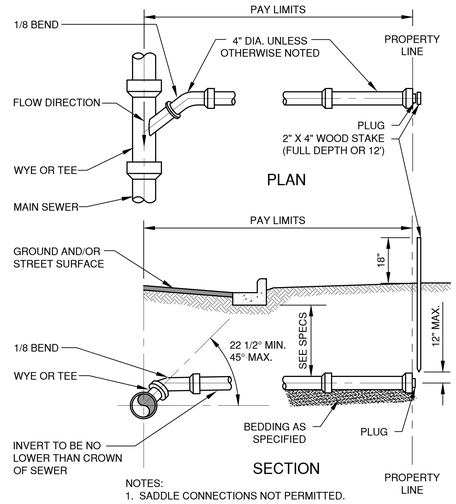

NOTES:
1. SADDLE CONNECTIONS NOT PERMITTED.
2. BACKFILL TO CONFORM TO MAIN SEWER.
3. MINIMUM SLOPE: 1/8 INCH PER FOOT.
4. MAXIMUM SLOPE: 1/2 INCH PER FOOT.

STANDARD SERVICE LATERAL

NOTE: CLEANOUT LINE TO BE THE SAME SIZE AND MATERIAL AS SEWER MAIN

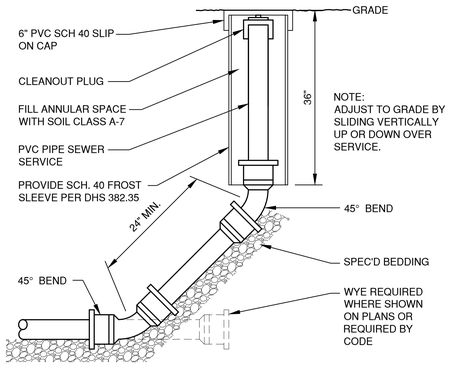

CLEAN-OUT DETAIL
(NON-TRAVELED AREAS)

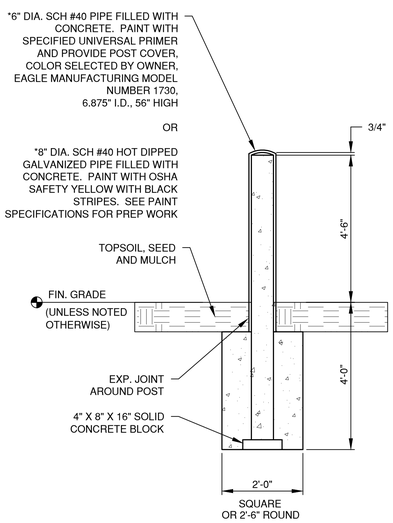

TYPICAL GUARD POST

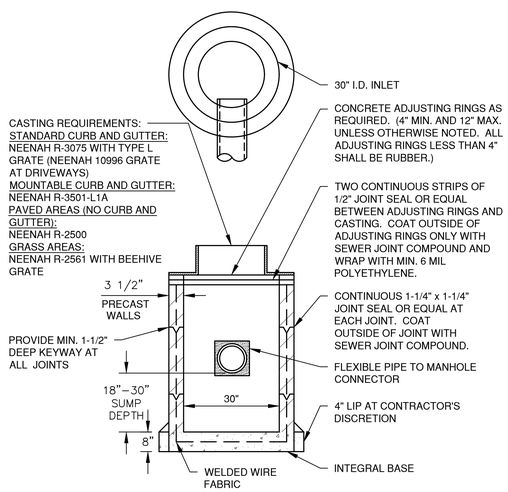

ALL PRECAST INLET UNITS SHALL CONFORM TO THE PERTINENT REQUIREMENTS OF AASHTO DESIGNATION M 199

STORM INLET

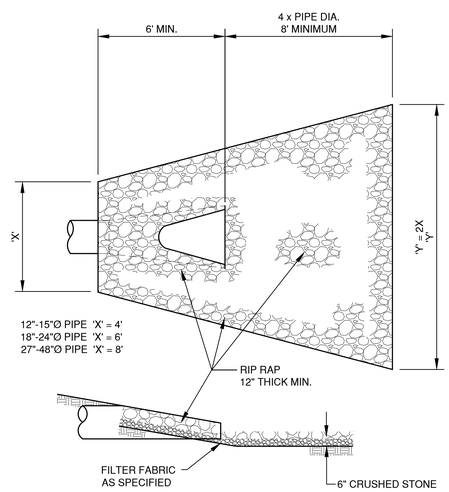

ENDWALL RIP RAP DETAIL

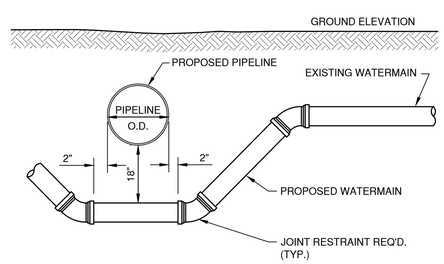

DETAIL FOR WATERMAIN OFFSET

WORKSHOP ARCHITECTS INC
201 E PITTSBURGH AVE #301
MILWAUKEE WI
53204

WORKSHOP ARCHITECTS ARCHITECT
201 E PITTSBURGH AVENUE #301
MILWAUKEE, WI 53204

ROBERT E LEE & ASSOCIATES CIVIL
1250 CENTENNIAL CENTRE BLVD
HOBART, WI 54155

DAMON FARBER LANDSCAPE
310 S 4TH STREET, STE 7050
MINNEAPOLIS, MN 55415

SPIRE ENGINEERING STRUCTURAL
305 PLANKINGTON AVE, STE 101
MILWAUKEE, WI 53203

RING & DUCHATEAU MECHANICAL
17400 W CAPITOL DR
BROOKFIELD, WI 53045

RING & DUCHATEAU ELECTRICAL
17400 W CAPITOL DR
BROOKFIELD, WI 53045

RING & DUCHATEAU PLUMBING
17400 W CAPITOL DR
BROOKFIELD, WI 53045

RING & DUCHATEAU FIRE PROTECTION
17400 W CAPITOL DR
BROOKFIELD, WI 53045

St. Norbert College
Facilities and Campus Planning

Project Location:
200 REID STREET
DE PERE, WISCONSIN 54115

SCHOOL OF BUSINESS
ST. NORBERT COLLEGE
DE PERE, WISCONSIN 54115

Sheet Title:
MISCELLANEOUS DETAILS

Revisions:

Date:	By:	Description:

FOR REFERENCE ONLY

Graphic Scale	AS INDICATED
WSA Number	23-332
Volume Number	
Issued For	100% CDS, BID, & PERMIT
Date Issued	03/04/2024
Sheet Number	C106

File: R:\6400\6410\641000\2\dwg\641000ZDET.dwg
Plot Date: Apr 19, 2024 – 11:55am

CONTRACTOR SHALL CONSTRUCT A TWO FOOT CLAY LINER
INSTALLED PER WDNR TECHNICAL STANDARD 1001.

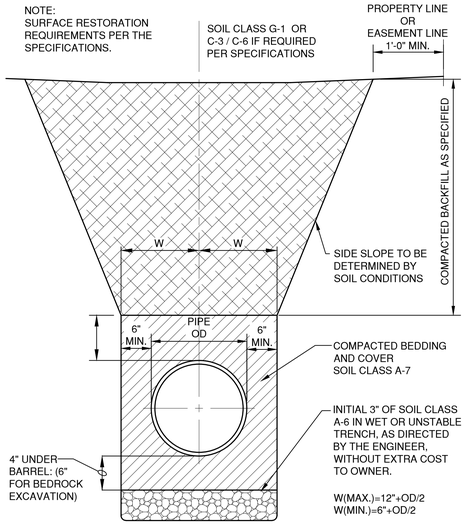

HDPE /PVC SEWER, WATERMAIN AND FORCEMAIN BEDDING AND TRENCH DETAIL

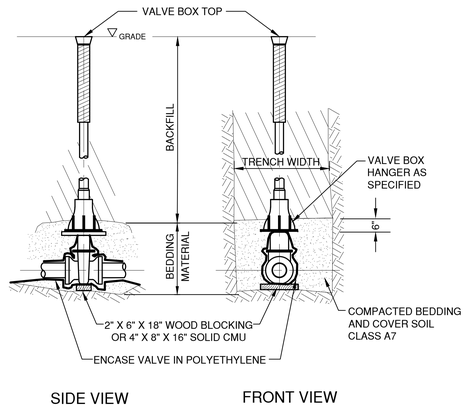

VALVE BOX SETTING

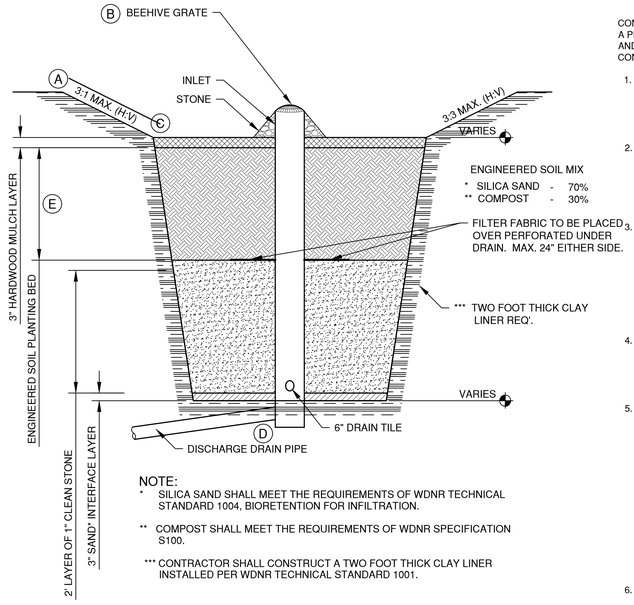

NOTE:
* SILICA SAND SHALL MEET THE REQUIREMENTS OF WDNR TECHNICAL STANDARD 1004, BIORETENTION FOR INFILTRATION.

** COMPOST SHALL MEET THE REQUIREMENTS OF WDNR SPECIFICATION S100.

*** CONTRACTOR SHALL CONSTRUCT A TWO FOOT THICK CLAY LINER INSTALLED PER WDNR TECHNICAL STANDARD 1001.

BIO-FLTER	(A) TOP ELEVATION	(B) STAND PIPE RIM	(C) BOTTOM AREA (S.F.), ELEV.	(D) DISCHARGE PIPE INV.	(E) ENGINEERED SOIL DEPTH
1	600.0	599.50	500, 598.50	594.39	2'
2	600.0	599.50	600, 598.50	593.93	2'

BIO-FILTER DETAIL

CONSTRUCTION SEQUENCING AND OVERSIGHT:
A PERSON TRAINED AND EXPERIENCED IN THE CONSTRUCTION, OPERATION AND MAINTENANCE OF INFILTRATION DEVICES SHALL BE RESPONSIBLE FOR CONSTRUCTION OF THE DEVICE. THE FOLLOWING APPLY:

1. CONSTRUCTION SITE STABILIZATION - CONSTRUCTION SITE RUNOFF FROM DISTURBED AREAS SHALL NOT BE ALLOWED TO ENTER THE BIORETENTION DEVICE. RUNOFF FROM PERVIOUS AREAS SHALL BE DIVERTED FROM THE DEVICE UNTIL THE THE PERVIOUS AREAS HAVE UNDERGONE ***FINAL STABILIZATION***.

2. SUITABLE WEATHER - CONSTRUCTION SHALL BE SUSPENDED DURING PERIODS OF RAINFALL OR SNOWMELT. CONSTRUCTION SHALL REMAIN SUSPENDED IF PONDED WATER IS PRESENT OR IF WATER IS PRESENT OR IF RESIDUAL SOIL MOISTURE CONTRIBUTES SIGNIFICANTLY TO THE POTENTIAL FOR SOIL SMEARING, CLUMPING OR OTHER FORMS OF COMPACTION.

3. COMPACTION AVOIDANCE - COMPACTION AND SMEARING OF THE SOILS BENEATH THE FLOOR AND SIDE SLOPES OF THE BIORETENTION AREA, AND COMPACTION OF THE SOILS USED FOR BACKFILL IN THE SOIL PLANTING BED, SHALL BE MINIMIZED. DURING SITE DEVELOPMENT, THE AREA DEDICATED TO THE BIORETENTION DEVICE SHALL BE CORDONED OFF TO PREVENT ACCESS BY ***HEAVY EQUIPMENT***. ACCEPTABLE EQUIPMENT FOR CONSTRUCTING THE BIORETENTION DEVICE INCLUDES EXCAVATION HOES, LIGHT EQUIPMENT WITH TURF TYPE TIRES, MARCH EQUIPMENT OR WIDE-TRACK LOADERS.

4. COMPACTION REMEDIATION - IF COMPACTION OCCURS AT THE BASE OF THE BIORETENTION DEVICE, THE SOIL SHALL BE REFRACTURED TO A DEPTH OF AT LEAST 12 INCHES. IF SMEARING OCCURS, THE SMEARED AREAS OF THE INTERFACE SHALL BE CORRECTED BY RAKING OR ROTO-TILLING.

5. PLACEMENT AND SETTLING OF ENGINEERED SOIL - THE FOLLOWING APPLY:
   A. PRIOR TO PLACEMENT IN THE BIORETENTION DEVICE, THE ENGINEERED SOIL SHALL BE PRE-MIXED AND THE MOISTURE CONTENT SHALL BE LOW ENOUGH TO PREVENT CLUMPING AND COMPACTION DURING PLACEMENT.
   B. THE ENGINEERED SOIL SHALL BE PLACED IN MULTIPLE LIFTS, EACH APPROXIMATELY 12 INCHES IN DEPTH.
   C. STEPS MAY BE TAKEN TO INDUCE MILD SETTLING OF THE ENGINEERED SOIL BED AS NEEDED TO PREPARE A STABLE PLANTING MEDIUM AND TO STABILIZE THE PONDING DEPTH. VIBRATING PLATE-STYLE COMPACTORS SHALL NOT BE USED TO INDUCE SETTLING.

6. PLANTING - THE ENTIRE SOIL PLANTING BED SHALL BE MULCHED PRIOR TO PLANTING VEGETATION TO HELP PREVENT COMPACTION OF THE PLANTING SOIL DURING THE PLANTING PROCESS. MULCH SHALL BE PUSHED ASIDE FOR THE PLACEMENT OF EACH PLANT.

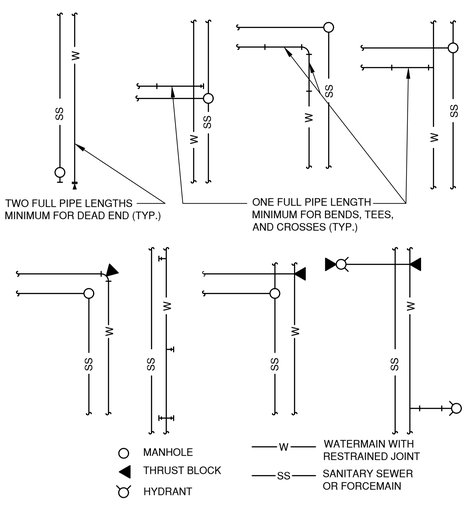

TYPICAL WATERMAIN RESTRAINT REQUIREMENTS FOR COMMON TRENCH CONSTRUCTION

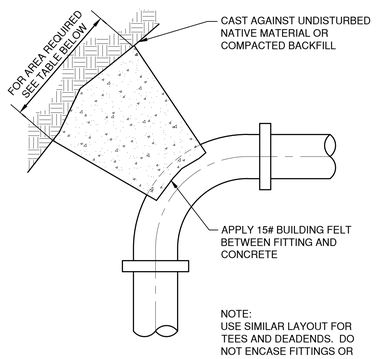

NOTE:
USE SIMILAR LAYOUT FOR TEES AND DEADENDS. DO NOT ENCASE FITTINGS OR JOINTS.

THRUST BLOCK AREA REQUIREMENTS, S.F.					
DEGREE OF BEND	4" PIPE	6" PIPE	8" PIPE	10" PIPE	12" PIPE
5° TO 22.5°	1.0	1.0	2.0	3.0	4.0
23° TO 45°	1.0	2.0	4.0	6.0	8.0
46° TO 90°	2.0	4.0	7.0	11.0	15.0
TEE OR DEAD END	2.0	3.0	5.0	8.0	10.0

TYPICAL THRUST BLOCK

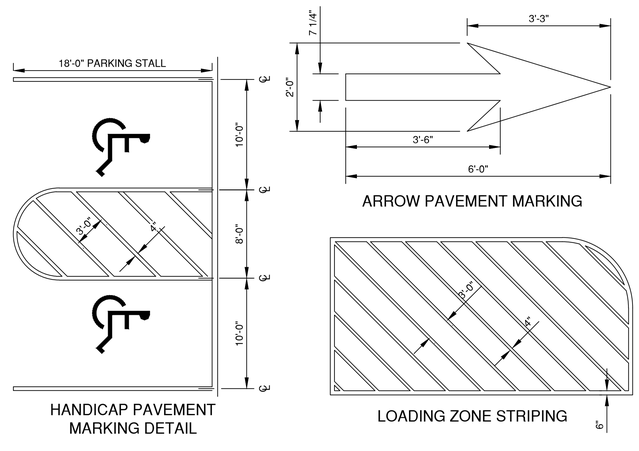

PAVEMENT PAINTING DETAIL

201 E PITTSBURGH AVE #301
MILWAUKEE WI
53204

WORKSHOP ARCHITECTS INC

WORKSHOP ARCHITECTS ARCHITECT
201 E PITTSBURGH AVENUE #301
MILWAUKEE, WI 53204

ROBERT E LEE & ASSOCIATES CIVIL
1250 CENTENNIAL CENTRE BLVD
HOBART, WI 54155

DAMON FARBER LANDSCAPE
310 S 4TH STREET, STE 7050
MINNEAPOLIS, MN 55415

SPIRE ENGINEERING STRUCTURAL
305 PLANKINGTON AVE, STE 101
MILWAUKEE, WI 53203

RING & DUCHATEAU MECHANICAL
17400 W CAPITOL DR
BROOKFIELD, WI 53045

RING & DUCHATEAU ELECTRICAL
17400 W CAPITOL DR
BROOKFIELD, WI 53045

RING & DUCHATEAU PLUMBING
17400 W CAPITOL DR
BROOKFIELD, WI 53045

RING & DUCHATEAU FIRE PROTECTION
17400 W CAPITOL DR
BROOKFIELD, WI 53045

St. Norbert College
Facilities and Campus Planning

Project Location:
290 REID STREET
DE PERE, WISCONSIN 54115

SCHOOL OF BUSINESS
ST. NORBERT COLLEGE
DE PERE, WISCONSIN 54115

Sheet Title:
MISCELLANEOUS DETAILS

Revisions:

Date:	By:	Descripton:

FOR REFERENCE ONLY

Graphic Scale	AS INDICATED
WSA Number	23-332
Volume Number	
Issued For	100% CDS, BID, & PERMIT
Date Issued	03/04/2024
Sheet Number	C107

File: R:\5400\641\0 (641.00002\dwg\641.00002DET.dwg
Plot Date: Apr 19, 2024 - 11:06am

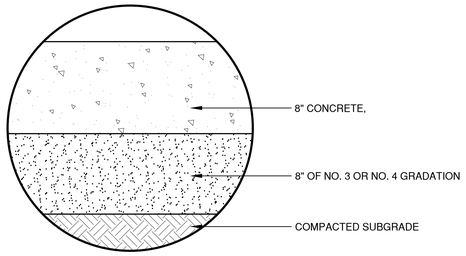

CONCRETE DRIVEWAY

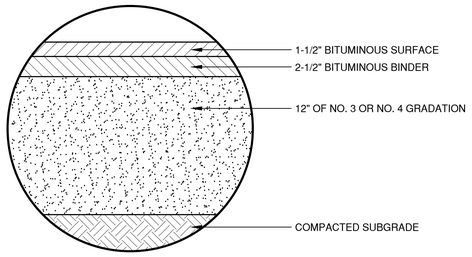

HEAVY DUTY ASPHALT PAVEMENT

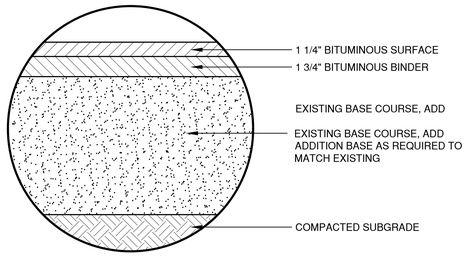

ASPHALT PAVEMENT - REID STREET

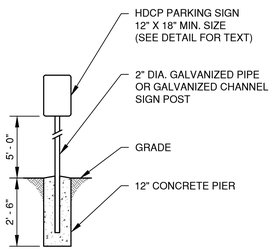

SIGN POST DETAIL

INTERNATIONAL SYMBOL OF ACCESSIBILITY

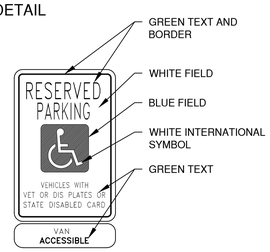

PARKING SIGN DETAIL

IT SHALL BE THE RESPONSIBILITY OF THE OWNER TO INSTALL (WHERE SHOWN HEREON), BARRIER FREE PARKING SIGNS IN CONFORMITY TO WISCONSIN ADMINISTRATIVE CODE: TRANS #200.07

ACCESSIBLE PARKING SIGN DETAIL

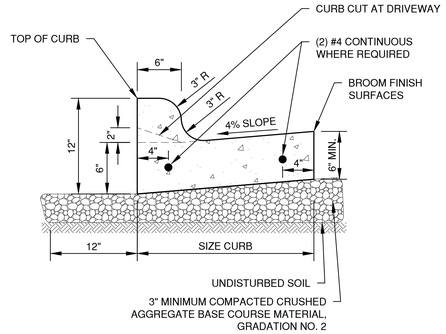

NOTES:
1. PROVIDE 1" EXPANSION JOINTS AT 300' INTERVALS OR AS SPECIFIED. PROVIDE CONTRACTION JOINTS EVERY 30' OR AS DIRECTED.
2. **AT REMOVAL AND REPLACEMENT AREAS** AND AT TIE-INS TO EXISTING CURB AND GUTTER, PROVIDE (2) #4 BARS, 18" LONG. DRILL AND GROUT INTO EXISTING CURB AND GUTTER 9". MATCH EXISTING SLOPE OF EXISTING GUTTER PAN.

STANDARD CURB AND GUTTER

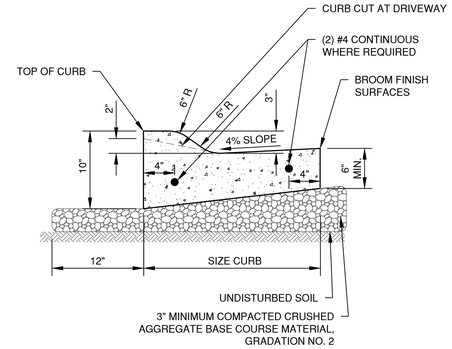

NOTES:
1. PROVIDE 1" EXPANSION JOINTS AT 300' INTERVALS OR AS SPECIFIED. PROVIDE CONTRACTION JOINTS EVERY 30' OR AS DIRECTED.
2. **AT REMOVAL AND REPLACEMENT AREAS** AND AT TIE-INS TO EXISTING CURB AND GUTTER, PROVIDE (2) #4 BARS, 18" LONG. DRILL AND GROUT INTO EXISTING CURB AND GUTTER 9". MATCH EXISTING SLOPE OF EXISTING GUTTER PAN.

MOUNTABLE CURB AND GUTTER

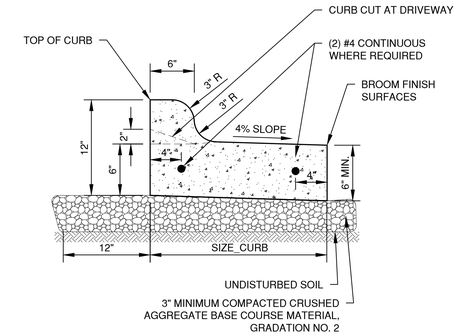

NOTES:
1. PROVIDE 1" EXPANSION JOINTS AT 300' INTERVALS OR AS SPECIFIED. PROVIDE CONTRACTION JOINTS EVERY 30' OR AS DIRECTED.
2. **AT REMOVAL AND REPLACEMENT AREAS** AND AT TIE-INS TO EXISTING CURB AND GUTTER, PROVIDE (2) #4 BARS, 18" LONG. DRILL AND GROUT INTO EXISTING CURB AND GUTTER 9". MATCH EXISTING SLOPE OF EXISTING GUTTER PAN.

SHEDDING CURB AND GUTTER

NOTE:
PROVIDE CONTRACTION JOINTS AT MAXIMUM 20' SPACING BY SAW CUTTING OR INSERTION OF DIVIDER PLATES

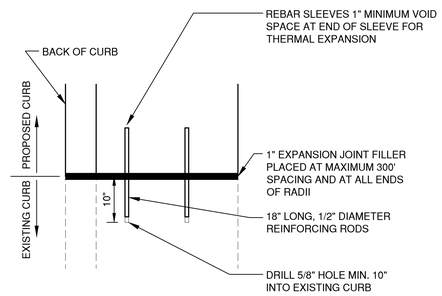

CURB TIE-IN DETAIL
(PROPOSED TO EXISTING)

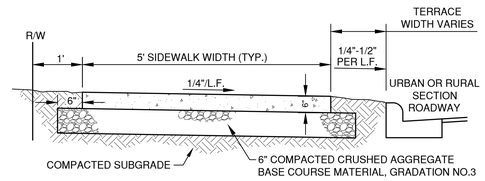

TYPICAL SECTION

NOTE:
REFER TO SPECIFICATIONS FOR REINFORCEMENTS.

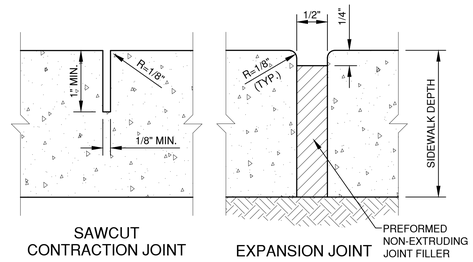

SAWCUT CONTRACTION JOINT

EXPANSION JOINT

WALK WIDTH	CONTRACTION JOINT SPACING		EXPANSION JOINT SPACING
	TRANSVERSE	LONGITUDINAL	
4'	4'	NOT REQ'D	100' MAX.
5'	5'	NOT REQ'D.	100' MAX.
6'	6'	NOT REQ'D.	100' MAX.
8'	4'	4'	100' MAX.
10'	5'	5'	100' MAX.
12'	6'	6'	100' MAX.

SIDEWALK DETAIL

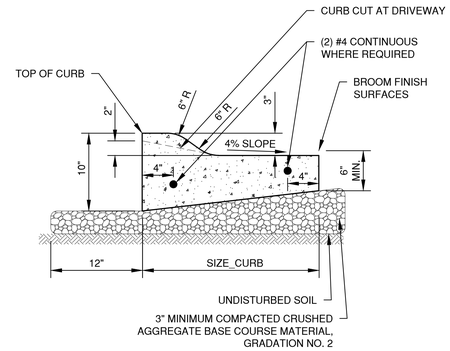

NOTES:
1. PROVIDE 1" EXPANSION JOINTS AT 300' INTERVALS OR AS SPECIFIED. PROVIDE CONTRACTION JOINTS EVERY 30' OR AS DIRECTED.
2. **AT REMOVAL AND REPLACEMENT AREAS** AND AT TIE-INS TO EXISTING CURB AND GUTTER, PROVIDE (2) #4 BARS, 18" LONG. DRILL AND GROUT INTO EXISTING CURB AND GUTTER 9". MATCH EXISTING SLOPE OF EXISTING GUTTER PAN.

MOUNTABLE SHEDDING CURB AND GUTTER

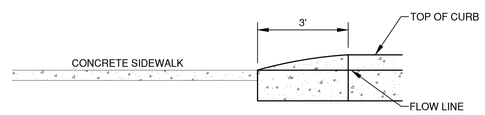

CURB TAPER DETAIL

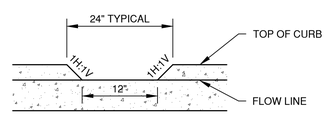

CURB OPENING DETAIL

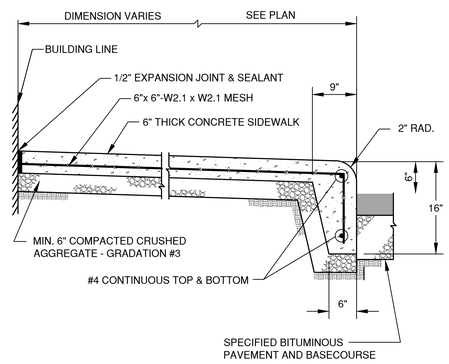

SIDEWALK WITH INTEGRAL CURB

WORKSHOP ARCHITECTS INC
201 E PITTSBURGH AVE #301
MILWAUKEE WI 53204

WORKSHOP ARCHITECTS ARCHITECT
201 E PITTSBURGH AVENUE #301
MILWAUKEE, WI 53204

ROBERT E LEE & ASSOCIATES CIVIL
1250 CENTENNIAL CENTRE BLVD
HOBART, WI 54155

DAMON FARBER LANDSCAPE
310 S 4TH STREET, STE 7050
MINNEAPOLIS, MN 55415

SPIRE ENGINEERING STRUCTURAL
305 PLANKINGTON AVE, STE 101
MILWAUKEE, WI 53203

RING & DUCHATEAU MECHANICAL
17400 W CAPITOL DR
BROOKFIELD, WI 53045

RING & DUCHATEAU ELECTRICAL
17400 W CAPITOL DR
BROOKFIELD, WI 53045

RING & DUCHATEAU PLUMBING
17400 W CAPITOL DR
BROOKFIELD, WI 53045

RING & DUCHATEAU FIRE PROTECTION
17400 W CAPITOL DR
BROOKFIELD, WI 53045

St. Norbert College
Facilities and Campus Planning

Project Location:
200 REID STREET
DE PERE, WISCONSIN 54115

SCHOOL OF BUSINESS
ST. NORBERT COLLEGE
DE PERE, WISCONSIN 54115

Sheet Title:
MISCELLANEOUS DETAILS

Revisions:

Date:	By:	Description:

FOR REFERENCE ONLY

Graphic Scale	AS INDICATED
WSA Number	23-332
Volume Number	
Issued For	DESIGN DEVELOPMENT
Date Issued	12/01/2023
Sheet Number	C108

File: R:\6400\6410\641000\dwg\641000ZDET.dwg
Plot Date: Feb 26, 2024 - 8:46pm

INLET PROTECTION NOTES:

INLET PROTECTION DEVICES SHALL BE IN ACCORDANCE WITH WDNR TECHNICAL STANDARD 1060, STORM DRAIN INLET PROTECTION FOR CONSTRUCTION SITES.

MANUFACTURED ALTERNATIVES APPROVED AND LISTED ON THE WDOT PRODUCT ACCEPTABILITY LIST MAY BE SUBSTITUTED.

WHEN REMOVING OR MAINTAINING INLET PROTECTION, CARE SHALL BE TAKEN SO THAT THE SEDIMENT TRAPPED ON THE GEOTEXTILE FABRIC DOES NOT FALL INTO THE INLET. ANY MATERIAL FALLING INTO THE INLET SHALL BE REMOVED IMMEDIATELY.

MAINTENANCE NOTES:

WHEN REMOVING OR MAINTAINING INLET PROTECTION, CARE SHALL BE TAKEN SO THAT THE SEDIMENT TRAPPED IN THE FABRIC DOES NOT FALL INTO THE STRUCTURE. MATERIAL THAT HAS FALLEN INTO THE INLET SHALL BE IMMEDIATELY REMOVED.

INSTALLATION NOTES: TYPE "B" AND "C"

TRIM EXCESS FABRIC IN THE FLOW LINE TO WITHIN 3" OF THE GRATE.

DEMONSTRATE A METHOD OF MAINTENANCE, USING A SEWN FLAP, HAND HOLDS OR OTHER METHOD TO PREVENT ACCUMULATED SEDIMENT FROM ENTERING THE INLET.

TYPE "D"

DO NOT INSTALL INLET PROTECTION TYPE D IN INLETS SHALLOWER THAN 30" MEASURED FROM THE BOTTOM OF THE INLET TO THE TOP OF THE GRATE.

TRIM EXCESS FABRIC IN THE FLOW LINE TO WITHIN 3" OF THE GRATE.

THE INSTALLED BAG SHALL HAVE A MINIMUM SIDE CLEARANCE, BETWEEN THE INLET WALLS AND THE BAG, MEASURED AT THE BOTTOM OF THE OVERFLOW HOLES, OF 3". WHERE NECESSARY, CINCH THE BAG, USING PLASTIC ZIP TIES, TO ACHIEVE THE 3" CLEARANCE, THE TIES SHALL BE PLACED AT THE MAXIMUM OF 4" FROM THE BOTTOM OF THE BAG.

NOTES:

1. TAPER BOTTOM OF BAG TO MAINTAIN THREE INCHES OF CLEARANCE BETWEEN THE BAG AND THE STRUCTURE, MEASURED FROM THE BOTTOM OF THE OVERFLOW OPENINGS TO THE STRUCTURE WALL.
2. GEOTEXTILE FABRIC TYPE FF FOR FLAPS, TOP AND BOTTOM OF THE OUTSIDE OF FILTER BAG. FRONT, BACK AND BOTTOM OF FILTER BAG BEING ONE PIECE.
3. FRONT LIFTING FLAP IS TO BE USED WHEN REMOVING AND MAINTAINING FILTER BAG.
4. SIDE FLAPS SHALL BE A MAXIMUM OF TWO INCHES LONG. FOLD THE FABRIC OVER AND REINFORCE WITH MULTIPLE STITCHES.
5. FLAP POCKETS SHALL BE LARGE ENOUGH TO ACCEPT WOOD 2" X 4". THE REBAR, STEEL PIPE, OR WOOD SHALL BE INSTALLED IN THE REAR FLAP AND SHALL NOT BLOCK THE TOP HALF OF THE CURB FACE OPENING.

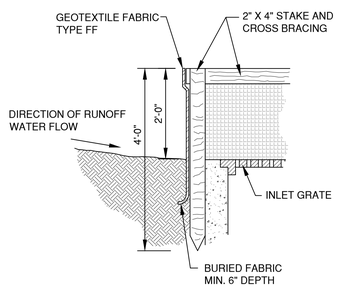

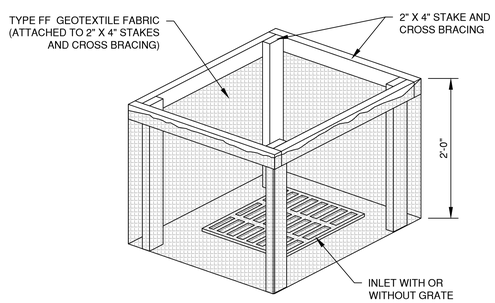

INLET PROTECTION, TYPE A

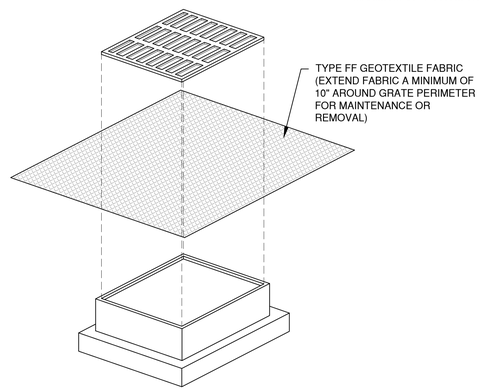

INLET PROTECTION, TYPE B
(WITHOUT CURB BOX)
(CAN BE INSTALLED IN ANY INLET WITHOUT A CURB BOX)

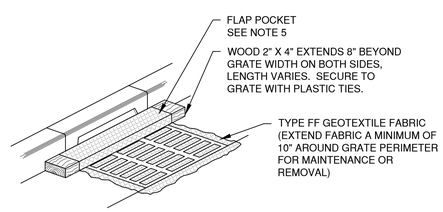

INLET PROTECTION, TYPE C
(WITH CURB BOX)

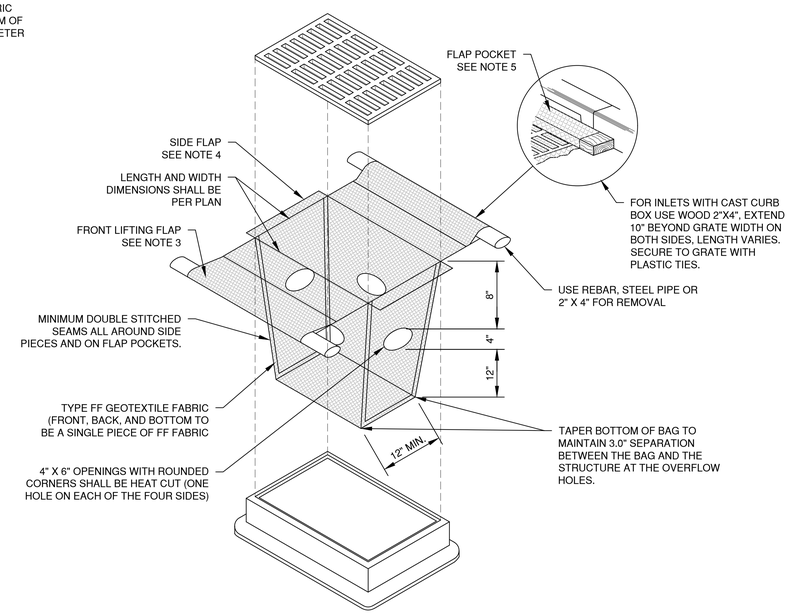

INLET PROTECTION, TYPE D
(CAN BE INSTALLED IN INLETS WITH OR WITHOUT CURB BOXES)

WORKSHOP
WORKSHOP ARCHITECTS INC
201 E PITTSBURGH AVE #301
MILWAUKEE WI
53204

WORKSHOP ARCHITECTS ARCHITECT
201 E PITTSBURGH AVENUE #301
MILWAUKEE, WI 53204

ROBERT E LEE & ASSOCIATES CIVIL
1250 CENTENNIAL CENTRE BLVD
HOBART, WI 54155

DAMON FARBER LANDSCAPE
310 S 4TH STREET, STE 7050
MINNEAPOLIS, MN 55415

SPIRE ENGINEERING STRUCTURAL
305 PLANKINGTON AVE, STE 101
MILWAUKEE, WI 53203

RING & DUCHATEAU MECHANICAL
17400 W CAPITOL DR
BROOKFIELD, WI 53045

RING & DUCHATEAU ELECTRICAL
17400 W CAPITOL DR
BROOKFIELD, WI 53045

RING & DUCHATEAU PLUMBING
17400 W CAPITOL DR
BROOKFIELD, WI 53045

RING & DUCHATEAU FIRE PROTECTION
17400 W CAPITOL DR
BROOKFIELD, WI 53045

St. Norbert College
Facilities and Campus Planning

Project Location:
290 REID STREET
DE PERE, WISCONSIN 54115

SCHOOL OF BUSINESS
ST. NORBERT COLLEGE
DE PERE, WISCONSIN 54115

Sheet Title:
EROSION CONTROL
INLET PROTECTION TYPES A, B, C, AND D

Revisions:

Date:	By:	Description:

FOR REFERENCE ONLY

Graphic Scale	AS INDICATED
WSA Number	23-332
Volume Number	
Issued For	100% CDS, BID, & PERMIT
Date Issued	03/04/2024
Sheet Number	C109

File: R:\6400\6410\641000ZC\dwg\641000ZEC.dwg
Plot Date: Feb 23, 2024 - 12:11pm

NOTES:

1. TAPER BOTTOM OF BAG TO MAINTAIN THREE INCHES OF CLEARANCE BETWEEN THE BAG AND THE STRUCTURE, MEASURED FROM THE BOTTOM OF THE OVERFLOW OPENINGS TO THE STRUCTURE WALL.
2. GEOTEXTILE FABRIC TYPE FF FOR FLAPS AND TOP HALF OF FILTER BAG. GEOTEXTILE FABRIC TYPE HR FOR BOTTOM HALF OF FILTER BAG. FRONT, BACK AND BOTTOM OF FILTER BAG BEING ONE PIECE.
3. FRONT LIFTING FLAP IS TO BE USED WHEN REMOVING AND MAINTAINING FILTER BAG.
4. SIDE FLAPS SHALL BE A MAXIMUM OF TWO INCHES LONG. FOLD THE FABRIC OVER AND REINFORCE WITH MULTIPLE STITCHES.
5. FLAP POCKETS SHALL BE LARGE ENOUGH TO ACCEPT WOOD 2" X 4". THE REBAR, STEEL PIPE, OR WOOD SHALL BE INSTALLED IN THE REAR FLAP AND SHALL NOT BLOCK THE TOP HALF OF THE CURB FACE OPENING.

MAINTENANCE NOTES:

WHEN REMOVING OR MAINTAINING INLET PROTECTION, CARE SHALL BE TAKEN SO THAT THE SEDIMENT TRAPPED IN THE FABRIC DOES NOT FALL INTO THE STRUCTURE. MATERIAL THAT HAS FALLEN INTO THE INLET SHALL BE IMMEDIATELY REMOVED.

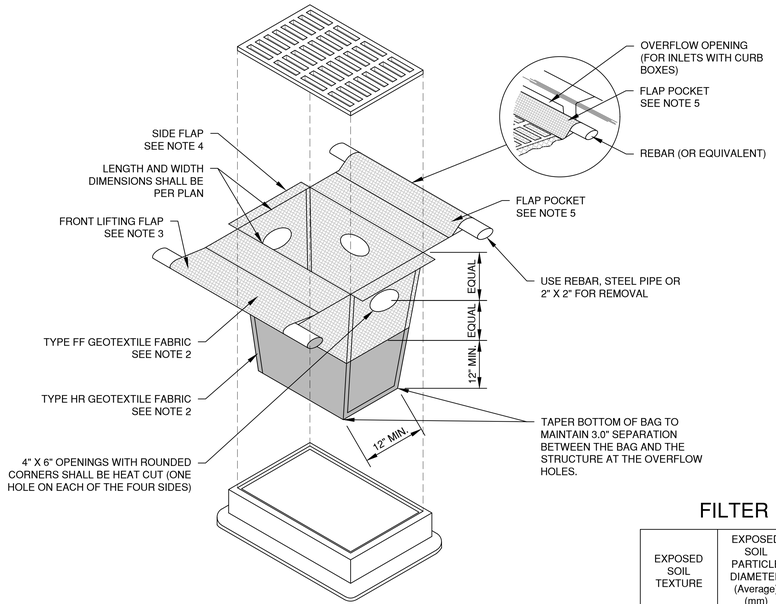

INLET PROTECTION, TYPE D-HR

(CAN BE INSTALLED IN INLETS WITH OR WITHOUT CURB BOXES)

NOTES:

1. TAPER BOTTOM OF BAG TO MAINTAIN THREE INCHES OF CLEARANCE BETWEEN THE BAG AND THE STRUCTURE, MEASURED FROM THE BOTTOM OF THE OVERFLOW OPENINGS TO THE STRUCTURE WALL.
2. GEOTEXTILE FABRIC TYPE FF FOR FLAPS, TOP AND BOTTOM OF OUTSIDE OF FILTER BAG. FRONT, BACK AND BOTTOM OF FILTER BAG BEING ONE PIECE.
3. FRONT LIFTING FLAP IS TO BE USED WHEN REMOVING AND MAINTAINING FILTER BAG.
4. SIDE FLAPS SHALL BE A MAXIMUM OF TWO INCHES LONG. FOLD THE FABRIC OVER AND REINFORCE WITH MULTIPLE STITCHES.
5. FLAP POCKETS SHALL BE LARGE ENOUGH TO ACCEPT WOOD 2" X 4". THE REBAR, STEEL PIPE, OR WOOD SHALL BE INSTALLED IN THE REAR FLAP AND SHALL NOT BLOCK THE TOP HALF OF THE CURB FACE OPENING.

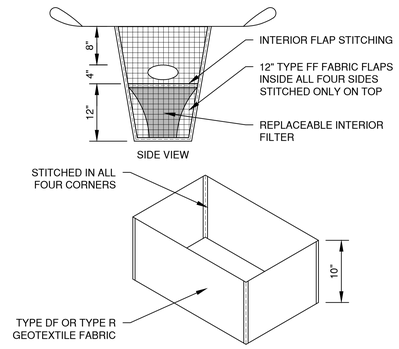

REPLACEABLE INTERIOR FILTER

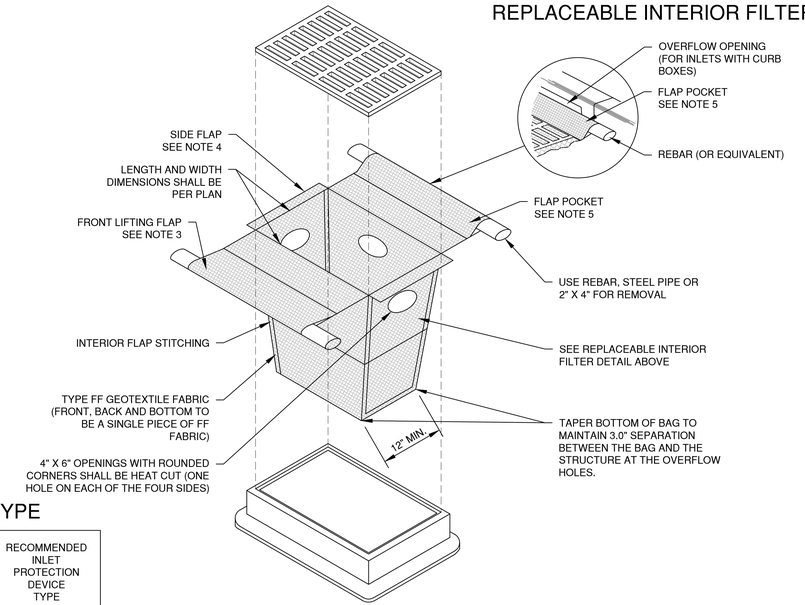

INLET PROTECTION, TYPE D-M

(CAN BE INSTALLED IN INLETS WITH OR WITHOUT CURB BOXES)

FILTER FABRIC TYPE

EXPOSED SOIL TEXTURE	EXPOSED SOIL PARTICLE DIAMETER (Average) (mm)	FILTER FABRIC TYPE*	RECOMMENDED INLET PROTECTION DEVICE TYPE
COARSE (SAND)	≥0.0625	FF	D, D-M
MEDIUM (SILT LOAM)	0.0624 - 0.005	DF	D, D-M
FINE (CLAY)	≤ 0.004	R	D-M
		HR	D-HR

* DF, R OR HR FILTERS MAY BE USED WHERE FF IS THE REQUIRED MINIMUM STANDARD. R OR HR MAY BE USED WHERE DF IS THE REQUIRED MINIMUM STANDARD.

** FOLLOW DESIGN CRITERIA OF WDNR TECHNICAL STANDARD 1060

WORKSHOP ARCHITECTS INC

201 E PITTSBURGH AVE #301
MILWAUKEE WI
53204

WORKSHOP ARCHITECTS ARCHITECT
201 E PITTSBURGH AVENUE #301
MILWAUKEE, WI 53204

ROBERT E LEE & ASSOCIATES CIVIL
1250 CENTENNIAL CENTRE BLVD
HOBART, WI 54155

DAMON FARBER LANDSCAPE
310 S 4TH STREET, STE 7050
MINNEAPOLIS, MN 55415

SPIRE ENGINEERING STRUCTURAL
305 PLANKINGTON AVE, STE 101
MILWAUKEE, WI 53203

RING & DUCHATEAU MECHANICAL
17400 W CAPITOL DR
BROOKFIELD, WI 53045

RING & DUCHATEAU ELECTRICAL
17400 W CAPITOL DR
BROOKFIELD, WI 53045

RING & DUCHATEAU PLUMBING
17400 W CAPITOL DR
BROOKFIELD, WI 53045

RING & DUCHATEAU FIRE PROTECTION
17400 W CAPITOL DR
BROOKFIELD, WI 53045

St. Norbert College
Facilities and Campus Planning

Project Location:
290 REID STREET
DE PERE, WISCONSIN 54115

SCHOOL OF BUSINESS
ST. NORBERT COLLEGE
DE PERE, WISCONSIN 54115

Revisions:

	Date:	By:	Description:

Sheet Title:
EROSION CONTROL
INLET PROTECTION
TYPE D-HR AND TYPE D-M

FOR REFERENCE ONLY

Graphic Scale	AS INDICATED
WSA Number	23-332
Volume Number	
Issued For	100% CDS, BID, & PERMIT
Date Issued	03/04/2024
Sheet Number	C110

File: R:\6400\6410\641002\dwg\641002EC.dwg
Plot Date: Feb 23, 2024 - 12:12pm

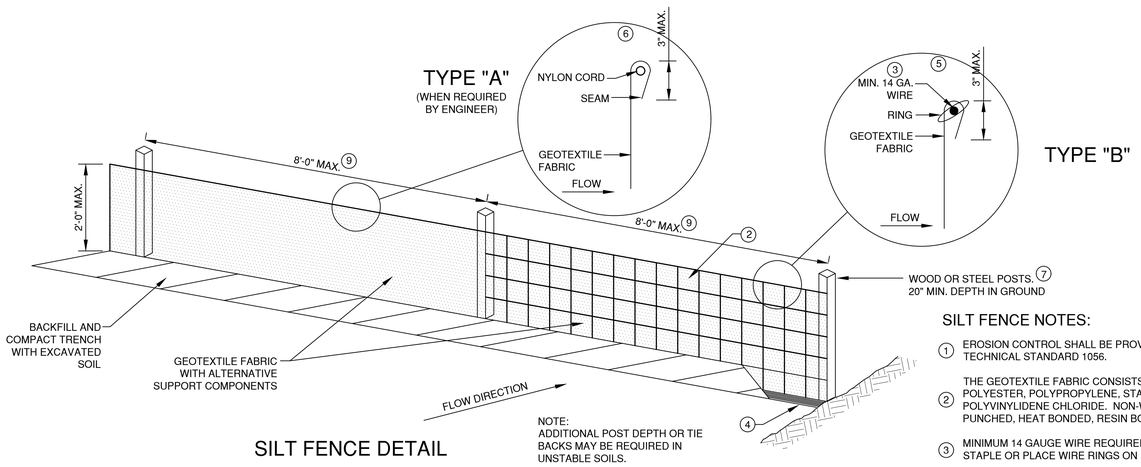

NOTE:
ADDITIONAL POST DEPTH OR TIE BACKS MAY BE REQUIRED IN UNSTABLE SOILS.

SILT FENCE DETAIL

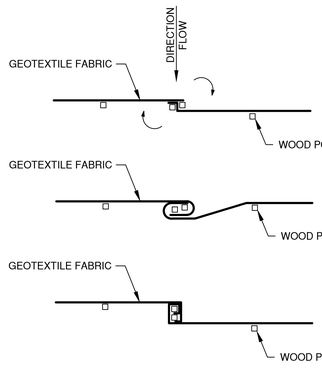

TWIST METHOD 8

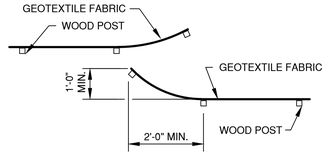

HOOK METHOD 8

JOINING TWO LENGTHS OF SILT FENCE

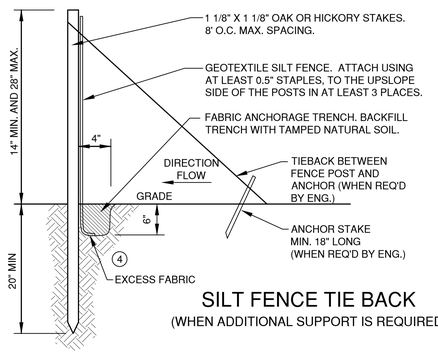

SILT FENCE TIE BACK

(WHEN ADDITIONAL SUPPORT IS REQUIRED)

SILT FENCE NOTES:

1. EROSION CONTROL SHALL BE PROVIDED IN ACCORDANCE WITH WDNR TECHNICAL STANDARD 1056.
2. THE GEOTEXTILE FABRIC CONSISTS OF EITHER WOVEN OR NON-WOVEN POLYESTER, POLYPROPYLENE, STABILIZED NYLON,POLYETHYLENE OR POLYVINYLIDENE CHLORIDE. NON-WOVEN FABRIC MAY BE NEEDLE PUNCHED, HEAT BONDED, RESIN BONDED, OR COMBINATIONS THEREOF.
3. MINIMUM 14 GAUGE WIRE REQUIRED, FOLD FABRIC 3" OVER THE WIRE AND STAPLE OR PLACE WIRE RINGS ON 12" C.C.
4. EXCAVATE A TRENCH A MINIMUM OF 4" WIDE AND 6" DEEP TO BURY AND ANCHOR THE GEOTEXTILE FABRIC. FOLD MATERIAL TO FIT TRENCH AND BACKFILL AND COMPACT TRENCH WITH EXCAVATED SOIL
5. WIRE SUPPORT FENCE SHALL BE 14 GAUGE MINIMUM WOVEN WIRE WITH A MAXIMUM MESH SPACING OF 6". SECURE TOP OF GEOTEXTILE FABRIC TO TOP OF FENCE WITH STAPLES OR WIRE RINGS AT 12" C.C. (TYPE B)
6. GEOTEXTILE FABRIC SHALL BE REINFORCED WITH AN INDUSTRIAL POLYPROPYLENE NETTING WITH A MAXIMUM MESH SPACING OF 3/4" OR EQUAL. A HEAVY DUTY NYLON TOP SUPPORT CORD OR EQUIVALENT IS REQUIRED. (TYPE A)
7. STEEL POSTS SHALL BE 5' LONG WITH A MINIMUM STRENGTH OF 1.33 LBS PER FOOT. WOOD POSTS SHALL BE A MINIMUM SIZE OF 1 1/8" X 1 1/8" OF OAK OR HICKORY. THE POSTS SHALL BE A MINIMUM OF 3' LONG FOR 24" SILT FENCE AND 4' LONG FOR 36" SILT FENCE.
8. CONSTRUCT SILT FENCE FROM A CONTINUOUS ROLL. IF POSSIBLE, BY CUTTING LENGTHS TO AVOID JOINTS. IF A JOINT IS NECESSARY, USE ONE OF THE FOLLOWING TWO METHODS: A.) TWIST METHOD -- OVERLAP THE END POSTS AND TWIST, OR ROTATE, AT LEAST 180 DEGREES, B:) HOOK METHOD -- HOOK THE END OF EACH SILT FENCE LENGTH.
9. THE MAXIMUM SPACING OF POSTS FOR WOVEN FABRIC SILT FENCE SHALL BE 8 FEET AND FOR NON-WOVEN FABRIC, 3 FEET.

EROSION CONTROL SHEET FLOW NOTES:

1. ANY SOIL STOCKPILED THAT REMAINS FOR MORE THAN 7 DAYS, SHALL BE COVERED OR TREATED WITH STABILIZATION PRACTICES SUCH AS TEMPORARY OR PERMANENT SEEDING AND MULCHING.
2. A MINIMUM OF 4" OF TOPSOIL MUST BE APPLIED TO ALL AREAS TO BE SEEDED OR SODDED.
3. ALL WASTE AND UNUSED BUILDING MATERIALS (INCLUDING GARBAGE, DEBRIS, CLEANING WASTES, WASTEWATER, TOXIC MATERIALS, OR HAZARDOUS MATERIALS) SHALL BE PROPERLY DISPOSED OF AND NOT ALLOWED TO BE CARRIED OFF-SITE BY RUNOFF OR WIND.
4. ALL OFF-SITE SEDIMENT DEPOSITS OCCURRING AS A RESULT OF CONSTRUCTION WORK OR A STORM EVENT SHALL BE CLEANED UP BY THE END OF EACH DAY. **FLUSHING SHALL NOT BE ALLOWED.**
5. ANY SOIL EROSION THAT OCCURS AFTER FINAL GRADING AND/OR THE APPLICATION OF STABILIZATION MEASURES MUST BE REPAIRED AND THE STABILIZATION WORK REDONE.
6. FOR ANY DISTURBED AREA THAT REMAINS INACTIVE FOR GREATER THAN 7 WORKING DAYS, OR WHERE GRADING WORK EXTENDS BEYOND THE PERMANENT SEEDING DEADLINES, THE SITE MUST BE TREATED WITH TEMPORARY STABILIZATION MEASURES SUCH AS SOIL TREATMENT, TEMPORARY SEEDING AND/OR MULCHING.
7. ALL TEMPORARY EROSION CONTROL PRACTICES SHALL BE MAINTAINED UNTIL THE SITE IS STABILIZED WITH 70% VEGETATION AND A NOTICE OF TERMINATION HAS BEEN APPROVED BY THE WDNR.
8. WIND EROSION SHALL BE KEPT TO A MINIMUM DURING CONSTRUCTION. WATERING, MULCH OR A TACKING AGENT MAY NEED TO BE UTILIZED TO PROTECT NEARBY RESIDENCES/WATER RESOURCES.
9. CONTRACTOR IS RESPONSIBLE FOR MAINTAINING ALL THE EROSION CONTROL MEASURES IN CONFORMANCE WITH THE WDNR CONSERVATION PRACTICE STANDARDS LATEST EDITION.
10. UPON COMPLETION OF STORM INLET CONSTRUCTION, INSTALL STORM DRAIN INLET PROTECTION FOR CONSTRUCTION SITE AS SPECIFIED.
11. FINE SEDIMENT ACCUMULATIONS SHALL BE CLEANED FROM STREETS, PRIVATE DRIVES, OR PARKING AREAS BY MANUAL OR MECHANICAL SWEEPING A MINIMUM OF ONCE A WEEK AND BEFORE ALL IMMINENT RAINS
12. EROSION AND SEDIMENT CONTROL STRUCTURES SHALL BE INSPECTED WEEKLY AND WITHIN 24 HOURS OF RAINFALL OF 0.5" OR MORE.

WORKSHOP
WORKSHOP ARCHITECTS INC
201 E PITTSBURGH AVE #301
MILWAUKEE WI
53204

WORKSHOP ARCHITECTS ARCHITECT
201 E PITTSBURGH AVENUE #301
MILWAUKEE, WI 53204

ROBERT E LEE & ASSOCIATES CIVIL
1250 CENTENNIAL CENTRE BLVD
HOBART, WI 54155

DAMON FARBER LANDSCAPE
310 S 4TH STREET, STE 7050
MINNEAPOLIS, MN 55415

SPIRE ENGINEERING STRUCTURAL
305 PLANKINGTON AVE, STE 101
MILWAUKEE, WI 53203

RING & DUCHATEAU MECHANICAL
17400 W CAPITOL DR
BROOKFIELD, WI 53045

RING & DUCHATEAU ELECTRICAL
17400 W CAPITOL DR
BROOKFIELD, WI 53045

RING & DUCHATEAU PLUMBING
17400 W CAPITOL DR
BROOKFIELD, WI 53045

RING & DUCHATEAU FIRE PROTECTION
17400 W CAPITOL DR
BROOKFIELD, WI 53045

St. Norbert College
Facilities and Campus Planning

Project Location:
290 REID STREET
DE PERE, WISCONSIN 54115

SCHOOL OF BUSINESS
ST. NORBERT COLLEGE
DE PERE, WISCONSIN 54115

Sheet Title:
EROSION CONTROL SHEET FLOW DETAILS

Revisions:

	Date:	By:	Description:

FOR REFERENCE ONLY

Graphic Scale	AS INDICATED
WSA Number	23-332
Volume Number	
Issued For	100% CDS, BID, & PERMIT
Date Issued	03/04/2024
Sheet Number	C111

File: R:\6400\6410\6410002\dwg\6410002EC.dwg
Plot Date: Feb 23, 2024 - 12:13pm

* TRACKOUT CONTROL TO BE PROVIDED PER DETAILS BELOW AND IN ACCORDANCE WITH WDNR TECHNICAL STANDARD 1057

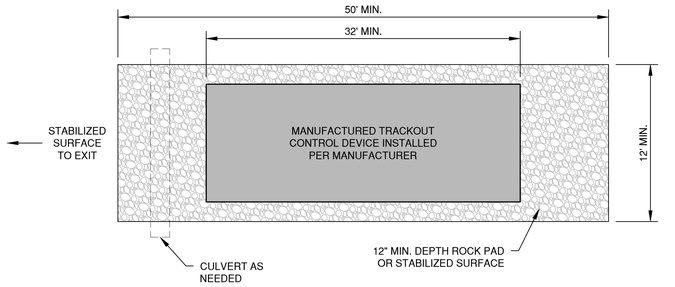

PLAN VIEW
(NTS)

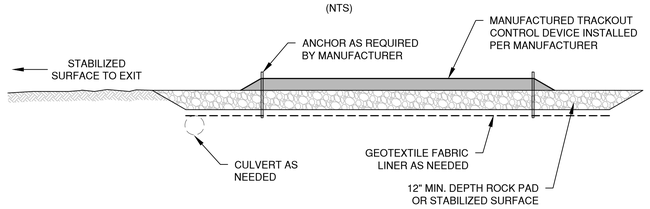

SECTION VIEW

NOTES:

1. THIS DETAIL IS PROVIDED AS AN EXAMPLE. COMPLY WITH MANUFACTURER'S SPECIFICATIONS WHILE ALSO MEETING THE MINIMUM MANUFACTURED TRACKING PAD LENGTH AND WIDTH DESCRIBED IN THIS TECHNICAL STANDARD.
2. INSTALL SUCH THAT RUNOFF FLOWS TO AN APPROVED TREATMENT PRACTICE.
3. A THINNER STONE LAYER OR OTHER STABLE SURFACE MAY BE ACCEPTABLE SUCH THAT RUTTING IS MINIMIZED AS VEHICLES MOUNT OR DISMOUNT FROM THE MANUFACTURERS TRACKOUT CONTROL DEVICE.
4. SELECT FABRIC TYPE BASED ON SOIL CONDITIONS AND VEHICLES LOADING.
5. DIRECT ALL EXISTING VEHICLES OVER MANUFACTURED TRACKOUT CONTROL DEVICE. STONE TRACKING PAD INSTALLATION ACROSS REMAINING ACCESS WIDTH IS RECOMMENDED. A 12' MINIMUM CAN BE USED WHEN EXITING TRAFFIC IS RESTRICTED TO A DEDICATED EGRESS LANE.
6. IF MINIMUM INSTALLATION LENGTH IS NOT POSSIBLE DUE TO SITE GEOMETRY, INSTALL THE MAXIMUM LENGTH PRACTICABLE AND SUPPLEMENT WITH ADDITIONAL PRACTICES AS NEEDED.
7. ACCOMMODATE EXITING VEHICLES IN EXCESS OF MANUFACTURED TRACKOUT CONTROL DEVICE WEIGHT CAPACITY WITH OTHER TREATMENT PRACTICES.

MANUFACTURED TRACKOUT CONTROL DETAIL

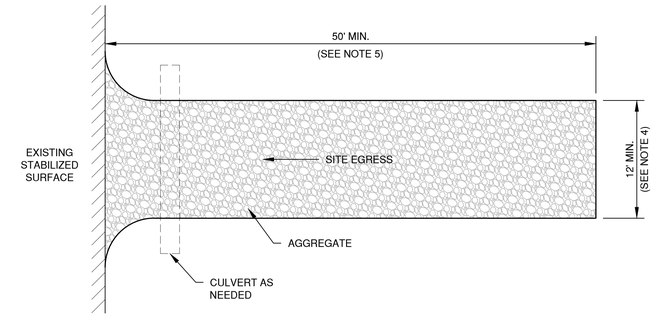

PLAN VIEW
(NTS)

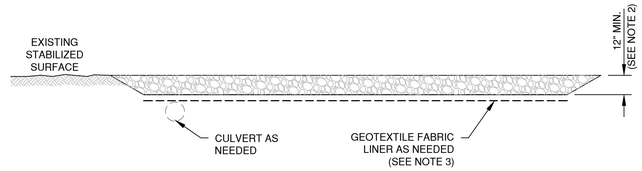

SECTION VIEW

NOTES:

1. USE HARD, DURABLE, ANGULAR STONE OR RECYCLED CONCRETE, MEETING THE FOLLOWING GRADATION:

SIEVE SIZE:	PERCENT BY WEIGHT PASSING:
3"	100
2 1/2"	90-100
1 1/2"	25-60
3/4"	0-20
3/8"	0-5

2. SLOPE THE STONE TRACKING PAD IN A MANNER TO DIRECT RUNOFF TO AN APPROVED TREATMENT PRACTICE.
3. SELECT FABRIC TYPE BASED ON SOIL CONDITIONS AND VEHICLES LOADING.
4. INSTALL TRACKING PAD ACROSS FULL WIDTH OF THE ACCESS POINT, OR RESTRICT EXISTING TRAFFIC TO A DEDICATED EGRESS LANE AT LEAST 12 FEET WIDE ACROSS THE TOP OF THE PAD.
5. IF A 50' PAD LENGTH IS NOT POSSIBLE DUE TO SITE GEOMETRY, INSTALL THE MAXIMUM LENGTH PRACTICABLE AND SUPPLEMENT WITH ADDITIONAL PRACTICES AS NEEDED.

STONE TRACKING PAD DETAIL

WORKSHOP
WORKSHOP ARCHITECTS, INC
201 E PITTSBURGH AVE #301
MILWAUKEE WI
53204

WORKSHOP ARCHITECTS ARCHITECT
201 E PITTSBURGH AVENUE #301
MILWAUKEE, WI 53204

ROBERT E LEE & ASSOCIATES CIVIL
1250 CENTENNIAL CENTRE BLVD
HOBART, WI 54155

DAMON FARBER LANDSCAPE
310 S 4TH STREET, STE 7050
MINNEAPOLIS, MN 55415

SPIRE ENGINEERING STRUCTURAL
305 PLANKINGTON AVE, STE 101
MILWAUKEE, WI 53203

RING & DUCHATEAU MECHANICAL
17400 W CAPITOL DR
BROOKFIELD, WI 53045

RING & DUCHATEAU ELECTRICAL
17400 W CAPITOL DR
BROOKFIELD, WI 53045

RING & DUCHATEAU PLUMBING
17400 W CAPITOL DR
BROOKFIELD, WI 53045

RING & DUCHATEAU FIRE PROTECTION
17400 W CAPITOL DR
BROOKFIELD, WI 53045

St. Norbert College
Facilities and Campus Planning

Project Location:
230 REID STREET
DE PERE, WISCONSIN 54115

SCHOOL OF BUSINESS
ST. NORBERT COLLEGE
DE PERE, WISCONSIN 54115

Sheet Title:
EROSION CONTROL
TRACK OUT CONTROL DETAILS

Revisions:

	Date:	By:	Description:

FOR REFERENCE ONLY

Graphic Scale	AS INDICATED
WSA Number	23-332
Volume Number	
Issued For	100% CDS, BID, & PERMIT
Date Issued	03/04/2024
Sheet Number	C112

File: R:\6400\6410\6410002\dwg\6410002EC.dwg
Plot Date: Feb 23, 2024 - 12:14pm

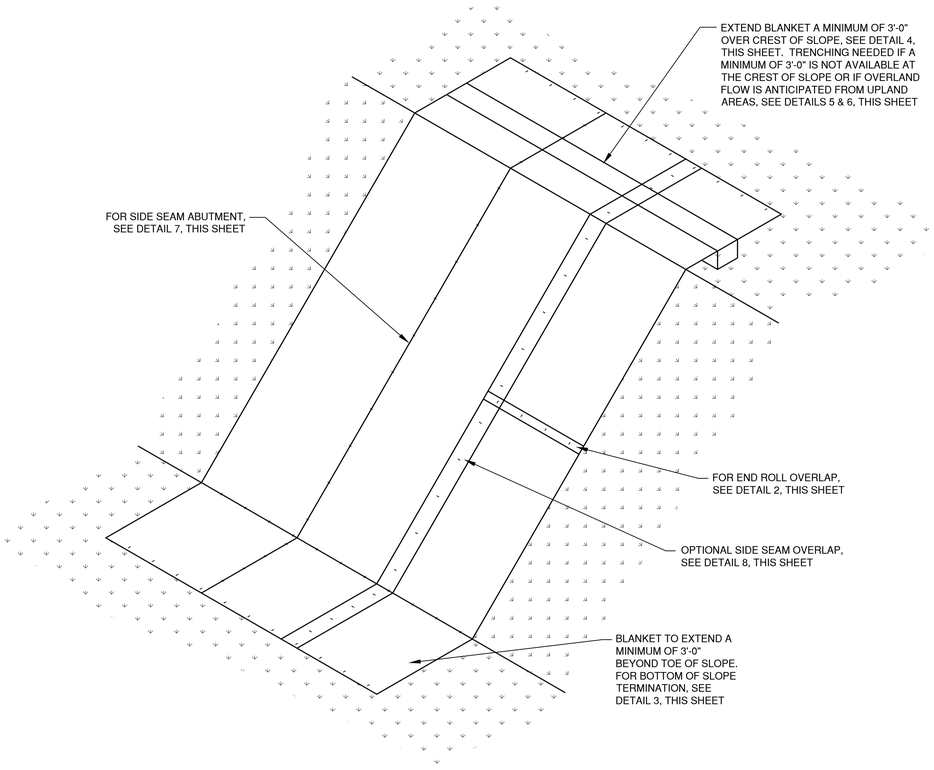

SLOPE DETAIL 1

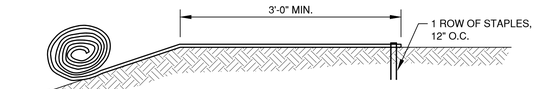

SLOPE CREST ANCHOR METHOD "A" (NO TRENCH) 4

DO NOT NEED TO TRENCH BLANKET IN IF IT CAN BE EXTENDED A MINIMUM OF 3'-0" OVER THE CREST OF THE SLOPE.

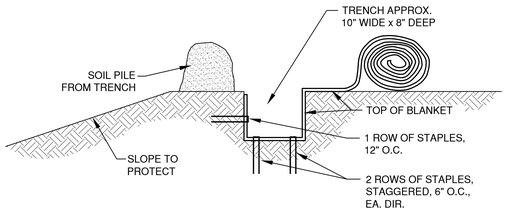

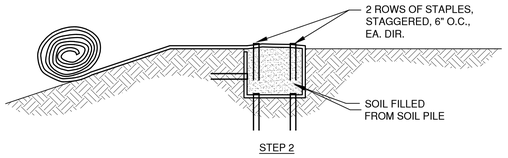

SLOPE TRENCHING METHOD "B" 5

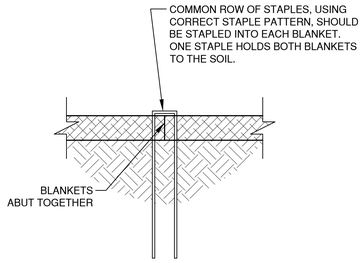

SIDE SEAM ABUT STAPLE DETAIL 7

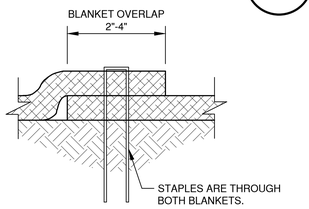

SIDE SEAM OVERLAP STAPLE DETAIL 8

NOTES:
1. STAPLE PATTERNS ARE DEPENDENT ON SITE CONDITIONS. SEE MANUFACTURER STAPLE PATTERN GUIDE FOR DETAILS.

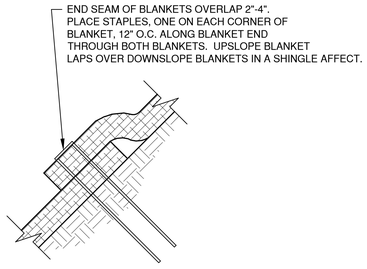

END ROLL OVERLAP 2

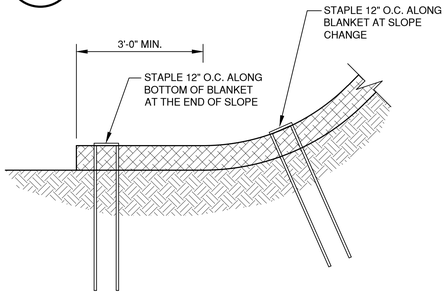

BOTTOM OF SLOPE TERMINATION 3

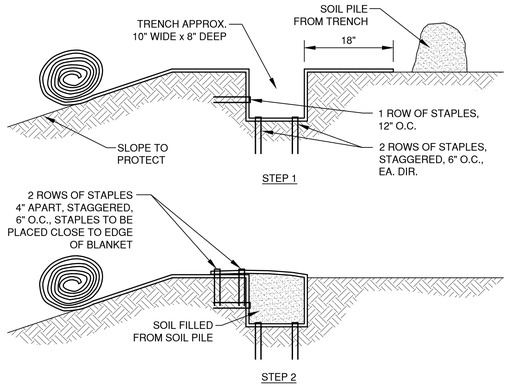

SLOPE TRENCHING METHOD "C" 6

WORKSHOP ARCHITECTS INC
201 E PITTSBURGH AVE #301
MILWAUKEE WI
53204

WORKSHOP ARCHITECTS ARCHITECT
201 E PITTSBURGH AVENUE #301
MILWAUKEE, WI 53204

ROBERT E LEE & ASSOCIATES CIVIL
1250 CENTENNIAL CENTRE BLVD
HOBART, WI 54155

DAMON FARBER LANDSCAPE
310 S 4TH STREET, STE 7050
MINNEAPOLIS, MN 55415

SPIRE ENGINEERING STRUCTURAL
305 PLANKINGTON AVE, STE 101
MILWAUKEE, WI 53203

RING & DUCHATEAU MECHANICAL
17400 W CAPITOL DR
BROOKFIELD, WI 53045

RING & DUCHATEAU ELECTRICAL
17400 W CAPITOL DR
BROOKFIELD, WI 53045

RING & DUCHATEAU PLUMBING
17400 W CAPITOL DR
BROOKFIELD, WI 53045

RING & DUCHATEAU FIRE PROTECTION
17400 W CAPITOL DR
BROOKFIELD, WI 53045

St. Norbert College
Facilities and Campus Planning

Project Location:
230 REID STREET
DE PERE, WISCONSIN 54115

SCHOOL OF BUSINESS
ST. NORBERT COLLEGE
DE PERE, WISCONSIN 54115

Sheet Title:
EROSION CONTROL
EROSION MAT SLOPE APPLICATION DETAILS

Revisions:

	Date:	By:	Description:

FOR REFERENCE ONLY

Graphic Scale	AS INDICATED
WSA Number	23-332
Volume Number	
Issued For	100% CDS, BID, & PERMIT
Date Issued	03/04/2024
Sheet Number	C113

File: R:\6400\6410\6410002\dwg\6410002EC.dwg
Plot Date: Feb 23, 2024 - 12:17pm

EXISTING CONDITIONS & SITE REMOVAL NOTES

SITE REMOVAL NOTES

1. EXISTING SITE INFORMATION WAS PROVIDED BY OTHERS. ACTUAL FIELD CONDITIONS MAY VARY. FIELD VERIFY UTILITY LOCATIONS AND ELEVATIONS PRIOR TO CONSTRUCTION.
2. THE LOCATIONS OF EXISTING UTILITIES SHOWN ON THIS PLAN HAVE BEEN DETERMINED FROM THE BEST INFORMATION AVAILABLE AND ARE GIVEN FOR THE CONVENIENCE OF THE CONTRACTOR. THE LANDSCAPE ARCHITECT ASSUMES NO RESPONSIBILITY FOR THEIR ACCURACY. PRIOR TO THE START OF DEMOLITION ACTIVITY, THE CONTRACTOR SHALL NOTIFY THE UTILITY COMPANIES FOR ONSITE LOCATIONS OF EXISTING UTILITIES. THE CONTRACTOR IS REQUIRED TO TAKE DUE PRECAUTIONARY MEASURES TO PROTECT EXISTING UTILITIES OR STRUCTURES LOCATED AT THE WORK SITE.
3. CONTRACTOR TO VERIFY THE LOCATION OF UNDERGROUND UTILITIES PRIOR TO BEGINNING ANY CONSTRUCTION BY COORDINATING WITH THE LOCAL UTILITY COMPANIES AND/OR AGENCIES. CALL LOCAL '811' OR REQUEST LOCATES ONLINE NO LESS THAN 48 HOURS PRIOR TO DIGGING TO LOCATE UNDERGROUND UTILITIES OR AS REQUIRED BY LOCAL REGULATIONS.
4. THE CONTRACTOR SHALL COORDINATE WITH RESPECTIVE UTILITY COMPANIES PRIOR TO THE REMOVAL AND/OR RELOCATION OF UTILITIES. THE CONTRACTOR SHALL COORDINATE WITH THE UTILITY COMPANY CONCERNING PORTIONS OF WORK WHICH MAY BE PERFORMED BY UTILITY COMPANY'S FORCES AND FEES WHICH ARE TO BE PAID TO THE UTILITY COMPANY FOR THEIR SERVICES. THE CONTRACTOR IS RESPONSIBLE FOR PAYING FEES AND CHARGES.
5. ALWAYS VERIFY BENCHMARK ELEVATIONS BETWEEN TWO BENCHMARKS.
6. REMOVAL ITEMS BECOME THE PROPERTY OF THE CONTRACTOR UNLESS SPECIFIED OTHERWISE. THE CONTRACTOR IS RESPONSIBLE FOR REMOVING DEBRIS FROM THE SITE AND DISPOSING THE DEBRIS IN A LAWFUL MANNER PER LOCAL GOVERNING AGENCIES. THE CONTRACTOR IS RESPONSIBLE FOR OBTAINING PERMITS REQUIRED FOR DEMOLITION AND DISPOSAL. FACILITIES TO BE REMOVED SHALL BE UNDERCUT TO SUITABLE MATERIAL AND BROUGHT TO GRADE WITH SUITABLE COMPACTED FILL MATERIAL PER THE SPECIFICATIONS.
7. PRIOR TO DEMOLITION, EROSION CONTROL DEVICES ARE TO BE INSTALLED WHERE NECESSARY AND OBTAIN AN NPDES STORM WATER PERMIT. REFER TO CIVIL FOR EROSION CONTROL.
8. DAMAGE TO REMAINING EXISTING CONDITIONS WILL BE REPLACED AT CONTRACTOR'S EXPENSE AND SHALL BE EQUAL TO OR EXCEED THE QUALITY OF CONSTRUCTION PRIOR TO DAMAGE.
9. CONCRETE PAVEMENT, SIDEWALKS, CURB AND GUTTER, AND OTHER POURED CONCRETE ITEMS ARE TO BE REMOVED TO AN EXISTING EXPANSION OR CONTRACTION JOINT.
10. CONTRACTOR SHALL LIMIT SAW-CUT AND PAVEMENT REMOVAL TO ONLY THOSE AREAS WHERE IT IS REQUIRED AS SHOWN ON THESE CONSTRUCTION PLANS. IF DAMAGE IS INCURRED ON THE SURROUNDING PAVEMENT, ETC. THE CONTRACTOR SHALL BE RESPONSIBLE FOR ITS REMOVAL AND REPAIR AT NO ADDITIONAL COST TO THE OWNER. BITUMINOUS PAVEMENT REMOVALS ARE TO BE MADE WITH A VERTICAL SAW CUT OR TO A NEAT MILLED EDGE.
11. CONTRACTOR SHALL PRESERVE VEGETATION NOT TO BE REMOVED BY CONSTRUCTION. CONTRACTOR SHALL BE RESPONSIBLE FOR RE-SEEDING OR SODDING AREAS DISTURBED BY CONSTRUCTION.
12. LOCATION AND ELEVATIONS OF IMPROVEMENTS TO BE MET (OR AVOIDED) SHALL BE CONFIRMED BY THE CONTRACTOR THROUGH FIELD EXPLORATIONS PRIOR TO CONSTRUCTION. CONTRACTOR SHALL REPORT TO THE LANDSCAPE ARCHITECT DISCREPANCIES BETWEEN THEIR MEASUREMENTS AND THESE PLANS. CONTRACTOR SHALL ALSO MAKE EXPLORATION EXCAVATIONS AND LOCATE EXISTING UNDERGROUND UTILITIES SUFFICIENTLY AHEAD OF CONSTRUCTION TO PERMIT REVISIONS TO PLANS IF REVISIONS ARE NECESSARY BECAUSE OF ACTUAL LOCATION OF EXISTING FACILITIES. CONTRACTOR IS REQUIRED TO TAKE PRECAUTIONARY MEASURES TO PROTECT THE UTILITY LINES SHOWN AND OTHER EXISTING LINES NOT OF RECORD OR NOT SHOWN ON THESE PLANS.

SITE AND LANDSCAPE NOTES

SITE PREPARATION NOTES

1. CONTRACTOR SHALL INSPECT THE SITE AND BECOME FAMILIAR WITH EXISTING CONDITIONS RELATING TO THE NATURE AND SCOPE OF WORK.
2. CONTRACTOR SHALL VERIFY PLAN LAYOUT AND BRING TO THE ATTENTION OF THE LANDSCAPE ARCHITECT DISCREPANCIES WHICH MAY COMPROMISE THE DESIGN OR INTENT OF THE LAYOUT.
3. CONTRACTOR SHALL ASSURE COMPLIANCE WITH APPLICABLE CODES AND REGULATIONS GOVERNING THE WORK AND MATERIALS SUPPLIED.
4. CONTRACTOR SHALL PROTECT EXISTING ROADS, CURBS/GUTTERS, TRAILS, TREES, LAWNS AND SITE ELEMENTS DURING CONSTRUCTION OPERATIONS. DAMAGE TO SAME SHALL BE REPAIRED AT NO ADDITIONAL COST TO THE OWNER.
5. CONTRACTOR SHALL VERIFY ALIGNMENT AND LOCATION OF UNDERGROUND AND ABOVE GRADE UTILITIES AND PROVIDE THE NECESSARY PROTECTION FOR SAME BEFORE CONSTRUCTION BEGINS (MINIMUM 10' CLEARANCE).
6. CONTRACTOR SHALL COORDINATE THE PHASES OF CONSTRUCTION AND PLANTING INSTALLATION WITH OTHER CONTRACTORS WORKING ON SITE.
7. UNDERGROUND UTILITIES SHALL BE INSTALLED SO THAT TRENCHES DO NOT CUT THROUGH ROOT SYSTEMS OF EXISTING TREES TO REMAIN.
8. EXISTING CONTOURS, TRAILS, VEGETATION, CURB/GUTTER AND OTHER ELEMENTS ARE BASED UPON INFORMATION SUPPLIED TO THE LANDSCAPE ARCHITECT BY OTHERS. CONTRACTOR SHALL VERIFY DISCREPANCIES PRIOR TO CONSTRUCTION AND NOTIFY LANDSCAPE ARCHITECT OF SAME.
9. HORIZONTAL AND VERTICAL ALIGNMENT OF PROPOSED WALKS, TRAILS OR ROADWAYS ARE SUBJECT TO FIELD ADJUSTMENT REQUIRED TO CONFORM TO LOCALIZED TOPOGRAPHIC CONDITIONS AND TO MINIMIZE TREE REMOVAL AND GRADING. CHANGES IN ALIGNMENT AND GRADES MUST BE APPROVED BY THE LANDSCAPE ARCHITECT PRIOR TO IMPLEMENTATION.
10. CONTRACTOR SHALL REVIEW THE SITE FOR DEFICIENCIES IN SITE CONDITIONS WHICH MIGHT NEGATIVELY AFFECT PLANT ESTABLISHMENT, SURVIVAL OR WARRANTY. UNDESIRABLE SITE CONDITIONS SHALL BE BROUGHT TO THE ATTENTION OF THE LANDSCAPE ARCHITECT PRIOR TO COMMENCEMENT OF WORK.
11. CONTRACTOR IS RESPONSIBLE FOR ONGOING MAINTENANCE OF NEWLY INSTALLED MATERIALS UNTIL TIME OF SUBSTANTIAL COMPLETION. REPAIR OF ACTS OF VANDALISM OR DAMAGE WHICH MAY OCCUR PRIOR TO SUBSTANTIAL COMPLETION SHALL BE THE RESPONSIBILITY OF THE LANDSCAPE CONTRACTOR.
12. EXISTING TREES OR SIGNIFICANT SHRUB MASSINGS FOUND ON SITE SHALL BE PROTECTED AND SAVED UNLESS NOTED TO BE REMOVED OR ARE LOCATED IN AN AREA TO BE GRADED. QUESTIONS REGARDING EXISTING PLANT MATERIAL SHALL BE BROUGHT TO THE ATTENTION OF THE LANDSCAPE ARCHITECT PRIOR TO REMOVAL.
13. EXISTING TREES TO REMAIN, UPON DIRECTION OF LANDSCAPE ARCHITECT, SHALL BE FERTILIZED AND PRUNED TO REMOVE DEAD WOOD, DAMAGED AND RUBBING BRANCHES.
14. CONTRACTOR SHALL PREPARE AND SUBMIT A WRITTEN REQUEST FOR THE SUBSTANTIAL COMPLETION INSPECTION OF LANDSCAPE AND SITE IMPROVEMENTS PRIOR TO SUBMITTING FINAL PAY REQUEST.
15. CONTRACTOR SHALL PREPARE AND SUBMIT REPRODUCIBLE AS-BUILT DRAWING(S) OF LANDSCAPE INSTALLATION, IRRIGATION AND SITE IMPROVEMENTS UPON COMPLETION OF CONSTRUCTION INSTALLATION AND PRIOR TO SUBSTANTIAL COMPLETION.
16. SYMBOLS ON PLAN DRAWING TAKE PRECEDENCE OVER SCHEDULES IF DISCREPANCIES IN QUANTITIES EXIST. SPECIFICATIONS AND DETAILS TAKE PRECEDENCE OVER NOTES.

SOIL TESTING

1. CONTRACTOR SHALL OBTAIN A SOIL SAMPLE(S) FROM PROJECT SITE AND/OR SALVAGED TOPSOIL STOCKPILE AND SUBMIT TO INDEPENDENT TESTING AGENCY. ANALYSIS AND RECOMMENDATIONS FOR (INCLUDING BUT NOT LIMITED TO) MACRONUTRIENTS, MICRONUTRIENTS, COMPOSITION AND SOLUBLE SALTS SHALL BE PROVIDED.
2. CONTRACTOR SHALL PROVIDE TWO SERIES OF TESTS: FIRST, PRIOR TO CONSTRUCTION; SECOND, AFTER SOIL IS AMENDED, PRIOR TO PLANTING.
3. CONTRACTOR SHALL PROVIDE ANALYSIS RESULTS AND RECOMMENDATIONS TO THE LANDSCAPE ARCHITECT FOR REVIEW AND APPROVAL PRIOR TO SOIL AMENDMENT AND PRIOR TO PLANTING.

PLANTING

1. SPRING PLANT MATERIAL INSTALLATION IS FROM APRIL 15 TO JUNE 15.
2. FALL CONIFEROUS PLANTING IS ACCEPTABLE FROM SEPTEMBER 1 TO OCTOBER 1.
3. FALL DECIDUOUS PLANTING IS ACCEPTABLE FROM AUGUST 15 UNTIL NOVEMBER 15.
4. ADJUSTMENTS TO PLANTING DATES MUST BE APPROVED IN WRITING BY THE LANDSCAPE ARCHITECT.
5. STAKE PROPOSED PLANTING LOCATIONS PER PLAN FOR REVIEW AND APPROVAL BY LANDSCAPE ARCHITECT PRIOR TO INSTALL.
6. PLANT MATERIAL SHALL COMPLY WITH THE CURRENT EDITION OF THE AMERICAN STANDARD FOR NURSERY STOCK, ANSI Z60.1. UNLESS NOTED OTHERWISE, DECIDUOUS SHRUBS SHALL HAVE AT LEAST 5 CANES AT THE SPECIFIED HEIGHT. ORNAMENTAL TREES SHALL HAVE NO 'V' CROTCHES AND SHALL BEGIN BRANCHING NO LOWER THAN 3' FEET ABOVE THE ROOT BALL. STREET AND BOULEVARD TREES SHALL BEGIN BRANCHING NO LOWER THAN 6' ABOVE PAVED SURFACE.
7. INSTALL PLANT MATERIAL AFTER FINAL GRADING AND CONSTRUCTION HAS BEEN COMPLETED IN THE IMMEDIATE AREA.
8. INSTALL PLANT MATERIALS PER PLANTING DETAILS.
9. SUBSTITUTION REQUESTS FOR PLANT MATERIAL TYPE & SIZE SHALL BE SUBMITTED TO THE LANDSCAPE ARCHITECT FOR CONSIDERATION PRIOR TO BIDDING. SUBSTITUTIONS AFTER BIDDING MUST BE APPROVED BY LANDSCAPE ARCHITECT AND ARE SUBJECT TO CONTRACT ADJUSTMENTS.
10. ADJUSTMENTS IN LOCATION OF PROPOSED PLANT MATERIALS MAY BE NEEDED IN FIELD. LANDSCAPE ARCHITECT MUST BE NOTIFIED PRIOR TO ADJUSTMENT OF PLANTS.
11. FERTILIZE PLANT MATERIALS IN ACCORDANCE WITH SOIL TEST RECOMMENDATIONS.INSTALL 18" DEPTH OF PLANTING SOIL IN AREAS RECEIVING PERENNIALS AND ANNUALS. PLANTING SOIL SHALL CONSIST OF LOAM TOPSOIL BORROW' MODIFIED TO CONTAIN A MAXIMUM OF 30% SAND, A PH OF 7.1 MAX, OR AS OTHERWISE SPECIFIED IN THE PROJECT SPECIFICATIONS MANUAL.
12. TREE WRAPPING MATERIAL SHALL BE PAPER APPLIED FROM TRUNK FLARE TO FIRST BRANCH. WRAP SMOOTH-BARKED DECIDUOUS TREES PLANTED IN THE FALL PRIOR TO DECEMBER 1 AND REMOVE WRAPPING AFTER MAY 1
13. .APPLY PRE-EMERGENT HERBICIDE (PREEN OR APPROVED EQUAL) IN ANNUAL, PERENNIAL, AND SHRUB BEDS FOLLOWED BY SHREDDED HARDWOOD MULCH. REFER TO SPECIFICATIONS FOR ADDITIONAL INFORMATION REGARDING USE OF HERBICIDES.

MULCHING

1. INSTALL 4" DEEP FINELY SHREDDED HARDWOOD MULCH RINGS AT CONIFEROUS & DECIDUOUS TREES WITH NO MULCH IN DIRECT CONTACT WITH TREE TRUNK.
2. INSTALL 3" DEEP FINELY SHREDDED HARDWOOD MULCH RINGS AT SHRUB PLANTING AREAS WITH NO MULCH IN DIRECT CONTACT WITH SHRUB STEMS.
3. INSTALL 3" DEEP FINELY SHREDDED MULCH IN PERENNIAL PLANTING BEDS. REMOVE ALL MULCH FROM STEMS OF PERENNIALS; PLANT STEMS SHOULD NOT BE IN DIRECT CONTACT WITH MULCH.

WATERING

1. PLANTED MATERIALS SHALL BE WATERED BY TEMPORARY MEANS UNTIL PLANTS ARE ESTABLISHED.
2. TEMPORARY WATERING MEANS, METHODS, AND SCHEDULING SHALL BE THE CONTRACTOR'S RESPONSIBILITY. REMOVE TEMPORARY WATERING EQUIPMENT UPON PLANT ESTABLISHMENT.

WARRANTY

1. WARRANTY NEW PLANT MATERIAL THROUGH ONE CALENDAR YEAR FROM THE DATE OF SUBSTANTIAL COMPLETION. NO PARTIAL ACCEPTANCE WILL BE CONSIDERED.

TURF NOTES

1. SOD AREAS DISTURBED DUE TO GRADING UNLESS NOTED OTHERWISE.
2. WHERE SOD ABUTS PAVED SURFACES, FINISHED GRADE OF SOD/SEED SHALL BE HELD 1" BELOW SURFACE ELEVATION OF TRAIL, SLAB, CURB, ETC.
3. SOD SHALL BE LAID PARALLEL TO THE CONTOURS AND SHALL HAVE STAGGERED JOINTS. ON SLOPES STEEPER THAN 3:1 OR IN DRAINAGE SWALES, SOD SHALL BE STAKED SECURELY WITH WOODEN STAKES; NO METAL STAKES ARE ALLOWED.
4. UNLESS NOTED OTHERWISE, THE APPROPRIATE DATES FOR SPRING SEED & SOD PLACEMENT IS FROM THE TIME GROUND HAS THAWED TO JUNE 15.
5. FALL SODDING IS ACCEPTABLE FROM AUGUST 15 TO NOVEMBER 1. FALL SEEDING IS ACCEPTABLE FROM AUGUST 15 TO SEPTEMBER 15. ADJUSTMENTS TO SOD/SEED PLANTING DATES MUST BE APPROVED IN WRITING BY THE LANDSCAPE ARCHITECT.
6. NO SOD NETTING ALLOWED ON SITE.

ABBREVIATIONS

APPROX	APPROXIMATE
AVG	AVERAGE
BLDG	BUILDING
BM	BENCHMARK
BOS	BOTTOM OF STAIR
BOT	BOTTOM
C	CHILLER
CB	CATCH BASIN
CIP	CAST-IN-PLACE
CJ	CONTROL JOINT
CL	CENTER LINE
CLR	CLEAR
CLL	CONTRACT LIMIT LINE
CMU	CONCRETE MASONRY UNIT
CONC	CONCRETE
CTR	CENTER
DAT	DATUM
DEG	DEGREE
DIA	DIAMETER
DIM	DIMENSION
DIST	DISTANCE
DIV	DIVISION
DWG	DRAWING
E	EAST
EA	EACH
EJ	EXPANSION JOINT
EL	ELEVATION
EP	EDGE OF PAVEMENT
EQ	EQUAL
EQSP	EQUAL SPACING
EQUIV	EQUIVALENT
EX	EXISTING
F	FAHRENHEIT
FC	FOOTCANDLE
FFE	FINISH FLOOR ELEVATION
FF&E	FURNITURE, FIXTURE, AND EQUIPMENT
FG	FINISHED GRADE
FOC	FACE OF CURB
FOW	FACE OF WALL
FV	FIELD VERIFY
GALV	GALVANIZED
GDR	GUARDRAIL
H	HIGH
HB	HOSE BIBB
HDPE	HIGH DENSITY POLYETHYLENE
HH	HAND HOLE
HDR	HANDRAIL
HORIZ	HORIZONTAL
HT	HEIGHT
HV	HIGH VOLTAGE
ID	INSIDE DIMENSION
INV.EL	INVERT ELEVATION
KW	KILOWATT
LDPE	LOW DENSITY POLYETHYLENE
LED	LIGHT EMITTING DIODE
LF	LINEAR FEET
LPT	LOW POINT
LTD	LIMITED
LV	LOW VOLTAGE
LW	LOW WATER
MAX	MAXIMUM
MFR.REC	MANUFACTURER'S RECOMMENDATIONS
MH	MANHOLE
MID	MIDDLE
MIN	MINIMUM
N	NORTH
NA	NOT APPLICABLE
NIC	NOT IN CONTRACT
NO	NUMBER
NOM	NOMINAL
NTS	NOT TO SCALE
OC	ON CENTER
OD	OUTSIDE DIAMETER
OH	OVERHANG
PA	PLANTING AREA
PB	PULL BOX
PC	POINT OF CURVE
PCC	PRECAST CONCRETE
PERF	PERFORATED
PERP	PERPENDICULAR
pH	ACID/ALKALINE SCALE
PH	PHASE
PI	POINT OF INTERSECTION
PKG	PACKAGE
PL	PROPERTY LINE
PLBG	PLUMBING
PRCST	PRECAST
PREFAB	PREFABRICATE
PROV	PROVISIONAL
PVC	POLYVINYL CHLORIDE
PWR	POWER
QTR	QUARTER
QTY	QUANTITY
R	RADIUS
RCP	REINFORCED CONCRETE PIPE
RECIRC	RECIRCULATE
RECPT	RECEPTACLE
REINF	REINFORCE
REQD	REQUIRED
REV	REVISION
RLG	RAILING
ROW	RIGHT OF WAY
S	SOUTH
SALV	SALVAGE
SEG	SEGMENT
SHT	SHEET
SIM	SIMILAR
SPEC	SPECIFICATION
SQ	SQUARE
SSD	SUBSOIL DRAIN
SST	STAINLESS STEEL
STA	STATION
STD	STANDARD
SUCT	SUCTION
T	TRANSFORMER
TAN	TANGENT
TBD	TO BE DETERMINED
TB-XX	TEST BORING
TD	TRENCH DRAIN
TEMP	TEMPORARY
THK	THICKNESS
THRU	THROUGH
TO_	TOP OF _
TOC	TOP OF CURB
TOL	TOLERANCE
TOS	TOP OF SLOPE
TOW	TOP OF WALL
TR	TRASH
TS	TOP OF STAIR
TYP	TYPICAL
UGND	UNDERGROUND
UNIF	UNIFORM
UP	UTILITY POLE
UV	ULTRAVIOLET
VAR	VARIES
VERT	VERTICAL
VRFY	VERIFY
W	WEST
W/	WITH
W/O	WITHOUT
WL	WATERLINE
WLD	WELDED
WT.EL	WATER ELEVATION
XFMR	TRANSFORMER
YR	YEAR
@	AT
&	AND
- / +	DIMENSION TOLERANCE
IJ	ISOLATION JOINT
HW	HIGH WATER
NP	NORMAL POOL
GB	GRADE BREAK

WORKSHOP
WORKSHOP ARCHITECTS INC
201 E PITTSBURGH AVE #301
MILWAUKEE WI 53204

WORKSHOP ARCHITECTS — ARCHITECT
201 E PITTSBURGH AVENUE #301
MILWAUKEE, WI 53204

ROBERT E LEE & ASSOCIATES — CIVIL
1250 CENTENNIAL CENTRE BLVD
HOBART, WI 54155

DAMON FARBER — LANDSCAPE
25 WEST MAIN, SUITE 500
MADISON, WI 53703

SPIRE ENGINEERING — STRUCTURAL
305 PLANKINGTON AVE, STE 101
MILWAUKEE, WI 53203

RING & DUCHATEAU — MECHANICAL
17400 W CAPITOL DR
BROOKFIELD, WI 53045

RING & DUCHATEAU — ELECTRICAL
17400 W CAPITOL DR
BROOKFIELD, WI 53045

RING & DUCHATEAU — PLUMBING
17400 W CAPITOL DR
BROOKFIELD, WI 53045

RING & DUCHATEAU — FIRE PROTECTION
17400 W CAPITOL DR
BROOKFIELD, WI 53045

St. Norbert College
Facilities and Campus
Planning

Project Location:
290 REID STREET
DE PERE, WISCONSIN 54115

SCHOOL OF BUSINESS
ST. NORBERT COLLEGE
DE PERE, WISCONSIN 54115

Sheet Title:
LANDSCAPE NOTES

Revisions:

No.	Date:	By:	Description:

Graphic Scale	AS INDICATED
WSA Number	23-332
Volume Number	
Issued For	100% CDS, BID, & PERMIT
Date Issued	03/04/2024
Sheet Number	L001

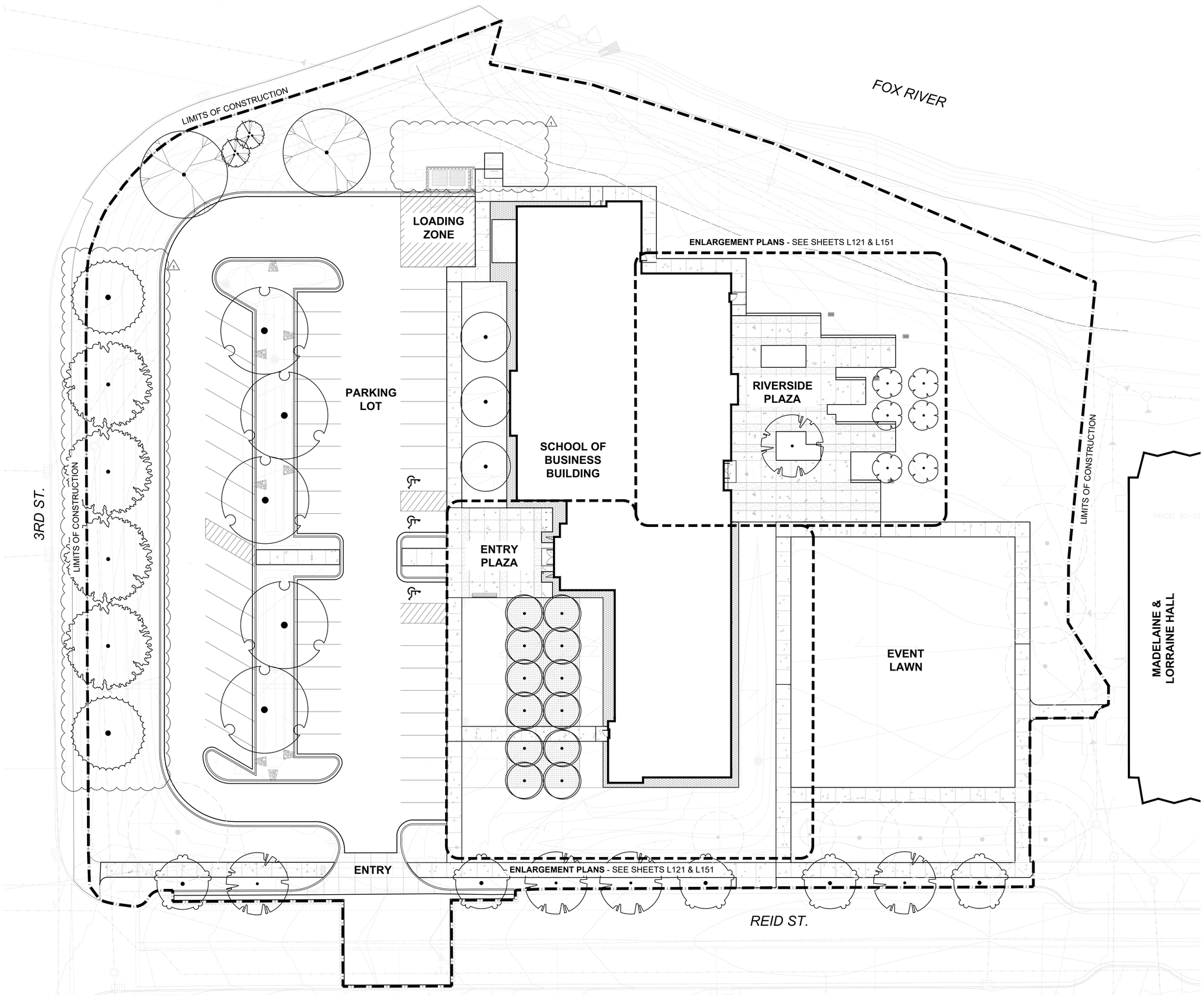

0 16 32 48
SCALE: 1" = 16'

NORTH

WORKSHOP
WORKSHOP ARCHITECTS, INC
201 E PITTSBURGH AVE #301
MILWAUKEE WI 53204

WORKSHOP ARCHITECTS ARCHITECT
201 E PITTSBURGH AVENUE #301
MILWAUKEE, WI 53204

ROBERT E LEE & ASSOCIATES CIVIL
1250 CENTENNIAL CENTRE BLVD
HOBART, WI 54155

DAMON FARBER LANDSCAPE
25 WEST MAIN, SUITE 500
MADISON, WI 53703

SPIRE ENGINEERING STRUCTURAL
305 PLANKINGTON AVE, STE 101
MILWAUKEE, WI 53203

RING & DUCHATEAU MECHANICAL
17400 W CAPITOL DR
BROOKFIELD, WI 53045

RING & DUCHATEAU ELECTRICAL
17400 W CAPITOL DR
BROOKFIELD, WI 53045

RING & DUCHATEAU PLUMBING
17400 W CAPITOL DR
BROOKFIELD, WI 53045

RING & DUCHATEAU FIRE PROTECTION
17400 W CAPITOL DR
BROOKFIELD, WI 53045

St. Norbert College
Facilities and Campus
Planning

Project Location:
290 REID STREET
DE PERE, WISCONSIN 54115

SCHOOL OF BUSINESS
ST. NORBERT COLLEGE
DE PERE, WISCONSIN 54115

Sheet Title:
SITE ORIENTATION PLAN

Revisions:

No.	Date:	By:	Description:
1	03/01/2024		ADDENDUM 1

Graphic Scale	AS INDICATED
WSA Number	23-332
Volume Number	
Issued For	100% CDS, BID, & PERMIT
Date Issued	04/01/2024
Sheet Number	L002

MATERIALS SCHEDULE

	EDGING							
SYMBOL	DESCRIPTION	DETAIL	MATERIAL PROFILE/ASSEMBLY	COLOR/FINISH	SPEC #			
ED-01	EDGING TYPE 01 - STEEL EDGING	1/L500	3/16" WIDE X 15" HGT. GALVANIZED STEEL EDGING	TBD	32 9300 PLANTS			
ED-02	EDGING TYPE 02 - DECORATIVE CONCRETE CURB	6/L500	12" W X 6" H REINFORCED CONCRETE CURB OVER COMPACTED AGGREGATE & COMPACTED BASE	CIP, TOPCAST FINISH, DECORATIVE CONCRETE	32 2500 DECORATIVE CONCRETE PAVING			

	LIGHTING							
SYMBOL	DESCRIPTION	DETAIL	MATERIAL PROFILE/ASSEMBLY	PRODUCT/MODEL	COLOR/FINISH			
LT-101	LIGHTING TYPE 01 - 30' HGT.LED AREA LIGHT; CAMPUS STANDARD	REFER TO ELECTRICAL	FIXTURE CODE P1; REFER TO ELECTRICAL SCHEDULE	FIXTURE CODE P1; REFER TO ELECTRICAL SCHEDULE	FIXTURE CODE P1; REFER TO ELECTRICAL SCHEDULE			
LT-102	LIGHTING TYPE 02 - 14' HGT. ASYMMETRIC WIDE BEAM POLE TOP LUMINAIRE	REFER TO ELECTRICAL	FIXTURE CODE P2; REFER TO ELECTRICAL SCHEDULE	FIXTURE CODE P2; REFER TO ELECTRICAL SCHEDULE	FIXTURE CODE P2; REFER TO ELECTRICAL SCHEDULE			
LT-103	LIGHTING TYPE 03 - 10' HGT. ASYMMETRIC WIDE BEAM POLE TOP LUMINAIRE	REFER TO ELECTRICAL	FIXTURE CODE P3; REFER TO ELECTRICAL SCHEDULE	FIXTURE CODE P3; REFER TO ELECTRICAL SCHEDULE	FIXTURE CODE P3; REFER TO ELECTRICAL SCHEDULE			
LT-104	LIGHTING TYPE 04 - 10' HGT. DECORATIVE LANTERN POST-TOP; CAMPUS STANDARD	REFER TO ELECTRICAL	FIXTURE CODE P4; REFER TO ELECTRICAL SCHEDULE	FIXTURE CODE P4; REFER TO ELECTRICAL SCHEDULE	FIXTURE CODE P4; REFER TO ELECTRICAL SCHEDULE			
LT-105	LIGHTING TYPE 05 - GROUND MOUNT FLOOD LIGHT	REFER TO ELECTRICAL	FIXTURE CODE OG; REFER TO ELECTRICAL SCHEDULE	FIXTURE CODE OG; REFER TO ELECTRICAL SCHEDULE	FIXTURE CODE OG; REFER TO ELECTRICAL SCHEDULE			

	MISCELLANEOUS							
SYMBOL	DESCRIPTION	DETAIL	DESCRIPTION					
M-101	MISC. SITE FEATURE - CHILDREN RELIC STATUE	8/L500	SALVAGED CHILDREN RELIC EPOXIED INTO WEATHERED STEEL BASE PLATE					

	MINERAL MULCH							
SYMBOL	DESCRIPTION	DETAIL	MATERIAL PROFILE/ASSEMBLY	MANUFACTURER	PRODUCT/MODEL	COMMENTS	SPEC #	
MM-101	MINERAL MULCH TYPE 01 - MAINTENANCE STRIP	2/L500	4" DEEP MINERAL MULCH	STONE CREEK HAVEN	CRUSHED MISSISSIPPI STONE, 1 3/4"	HTTPS://STONECREEKHAVENLLC.COM/	32 9300 PLANTS	
MM-102	MINERAL MULCH TYPE 02 - STORMWATER SWALE MAINTENANCE STRIP	REFER TO CIVIL	12" DEEP MINERAL MULCH	STONE CREEK HAVEN	CRUSHED MISSISSIPPI STONE, 6" -12"	HTTPS://STONECREEKHAVENLLC.COM/	32 9300 PLANTS	
MM-103	MINERAL MULCH TYPE 03 - CRUSHED AGGREGATE	7/L500	4" CRUSHED AGGREGATE	STONE CREEK HAVEN	WASHED CRUSHED MISSISSIPPI STONE, 3/4"		32 9300 PLANTS	

	PAVING							
SYMBOL	DESCRIPTION	DETAIL	MATERIAL PROFILE/ASSEMBLY	COLOR/FINISH	SPEC #			
P-101	PAVING TYPE 01 - CONCRETE	REFER TO CIVIL	CIP CONCRETE, 6" CONCRETE PAVEMENT OVER COMPACTED AGGREGATE BASE, COMPACTED SUBGRADE; SAW CUT JOINTS	STANDARD CIP CONCRETE PAVING, LIGHT BROOM FINISH	REFER TO CIVIL			
P-102	PAVING TYPE 02 - DECORATIVE CONCRETE	REFER TO SPEC	CIP CONCRETE, 6" DECORATIVE CONCRETE PAVEMENT OVER COMPACTED AGGREGATE BASE, COMPACTED SUBGRADE, TOPCAST FINISH, SAW CUT JOINTS	TOPCAST FINISH	32 2500 DECORATIVE CONCRETE PAVING			

	SITE FURNITURE							
SYMBOL	DESCRIPTION	DETAIL	MATERIAL PROFILE/ASSEMBLY	MANUFACTURER	PRODUCT/MODEL	COLOR/FINISH	COMMENTS	SPEC #
SF-101	SITE FURNITURE TYPE 05 - BICYLE RACK	5/L500	HOT-DIP GALVANIZED, POWDER-COATED STEEL, ANCHORING BASE PLATE	VESTRE	686A VROOM BICYCLE RACK, SMALL	RAL 6017 MAY GREEN		32 3300 SITE FURNISHINGS
SF-102	SITE FURNITURE TYPE 02 - BISTRO CHAIR BY OWNER		HOT-DIP GALVANIZED, POWDER-COATED STEEL	VESTRE	7013 APRIL GO CHAIR	RAL 6017 MAY GREEN & NORDIC PINE		32 3300 SITE FURNISHINGS
SF-103	SITE FURNITURE TYPE 03 - BISTRO TABLE BY OWNER		HOT-DIP GALVANIZED, POWDER-COATED STEEL	VESTRE	5132 MUNCH CAFE TABLE ROUND	RAL 6017 MAY GREEN		32 3300 SITE FURNISHINGS
SF-104	SITE FURNITIURE TYPE 04 - DUAL STREAM RECEPTICAL BY OWNER		HOT-DIP GALVANIZED, POWDER-CAOTED STEEL	VESTRE	1448 DIALOG RECYCLING 3X55	RAL 6017 MAY GREEN		32 3300 SITE FURNISHINGS
SF-105	SITE FURNITURE TYPE 05 - SUN LOUNGER	4/L500	THERMALLY MODIFIED ASH SEAT AND BACK, HOT-DIP GALVANIZED, POWDER-COATED STEEL WITH BASE PLATE SURFACE MOUNT	CUSTOM MENOMINEE TRIBAL ENTERPRISES SUN LOUNGERS, $5,700 PER PIECE ALLOCATION			DEDUCT ALTERNATIVE #3 - VESTRE KONG SUN BENCH (4066A), RAL 6017 MAY GREEN & NORDIC PINE	32 3300 SITE FURNISHINGS
SF-106	SITE FURNITURE TYPE 06 - ENTRY PLAZA BENCH	3/L500	THERMALLY MODIFIED ASH AND GALVANIZED STEEL BACKED BENCH, 32" X 212" X 27", SURFACE-MOUNTED	CUSTOM MENOMINEE TRIBAL ENTERPRISES SITE BENCH, $3,000 ALLOCATION			DEDUCT ALTERNATIVE #4 - VESTRE BRISKEBY SEAT WITH BACK AND ARMRESTS (6017), RAL 6017 MAY GREEN & NORDIC PINE	32 3300 SITE FURNISHINGS

WORKSHOP
WORKSHOP ARCHITECTS INC
201 E PITTSBURGH AVE #301
MILWAUKEE WI 53204

WORKSHOP ARCHITECTS — ARCHITECT
201 E PITTSBURGH AVENUE #301
MILWAUKEE, WI 53204

ROBERT E LEE & ASSOCIATES — CIVIL
1250 CENTENNIAL CENTRE BLVD
HOBART, WI 54155

DAMON FARBER — LANDSCAPE
25 WEST MAIN, SUITE 500
MADISON, WI 53703

SPIRE ENGINEERING — STRUCTURAL
305 PLANKINGTON AVE, STE 101
MILWAUKEE, WI 53203

RING & DUCHATEAU — MECHANICAL
17400 W CAPITOL DR
BROOKFIELD, WI 53045

RING & DUCHATEAU — ELECTRICAL
17400 W CAPITOL DR
BROOKFIELD, WI 53045

RING & DUCHATEAU — PLUMBING
17400 W CAPITOL DR
BROOKFIELD, WI 53045

RING & DUCHATEAU — FIRE PROTECTION
17400 W CAPITOL DR
BROOKFIELD, WI 53045

St. Norbert College
Facilities and Campus Planning

Project Location:
290 REID STREET
DE PERE, WISCONSIN 54115

SCHOOL OF BUSINESS
ST. NORBERT COLLEGE
DE PERE, WISCONSIN 54115

Sheet Title:
MATERIALS SCHEDULE

Revisions:

No.	Date:	By:	Description:

Graphic Scale	AS INDICATED
WSA Number	23-332
Volume Number	
Issued For	100% CDS, BID, & PERMIT
Date Issued	03/04/2024
Sheet Number	L010

PLANTING SCHEDULE - TREES

SYMBOL	CODE	QTY	BOTANICAL / COMMON NAME	SIZE	CONT.
CONIFERS					
	PS	2	PINUS STROBUS WHITE PINE	7` HT.	B&B
DECIDUOUS TREES					
	BN	3	BETULA NIGRA RIVER BIRCH	3" CAL.	B&B
	CO	4	CELTIS OCCIDENTALIS COMMON HACKBERRY	3" CAL.	B&B
	FG	2	FAGUS GRANDIFOLIA AMERICAN BEECH	2.5" CAL.	B&B
	GI	5	GLEDITSIA TRIACANTHOS INERMIS 'SKYCOLE' SKYLINE® HONEY LOCUST	2.5" CAL.	B&B
	PP	12	POPULUS TREMULOIDES 'NE ARB' PRAIRIE GOLD® QUAKING ASPEN	3" CAL.	B&B
	QB	5	QUERCUS BICOLOR SWAMP WHITE OAK	2.5" CAL.	B&B
	TB	5	TILIA AMERICANA 'BOULEVARD' BOULEVARD AMERICAN LINDEN	2.5" CAL.	B&B
FRUIT TREES					
	PR	6	PRUNUS PERSICA 'RELIANCE' RELIANCE PEACH	#10	CONT.
ORNAMENTAL TREES					
	AG	2	AMELANCHIER X GRANDIFLORA 'AUTUMN BRILLIANCE' AUTUMN BRILLIANCE APPLE SERVICEBERRY	8` HT. CLUMP	B&B

PLANTING SCHEDULE - SHRUB, PERENNIAL, & SEED MIX AREAS

SYMBOL	CODE	QTY	BOTANICAL / COMMON NAME	SIZE	CONT.	SPACING	REMARKS
DECIDUOUS SHRUBS							
	CE	76	CORNUS SERICEA 'ARCTIC FIRE' ARCTIC FIRE RED TWIG DOGWOOD	#10	CONT.	42" o.c.	
EVERGREEN SHRUBS							
	JM	42	JUNIPERUS CHINENSIS 'MANEYI' MANEY JUNIPER	#5	CONT.	54" o.c.	
	JF	115	JUNIPERUS CHINENSIS 'SEA GREEN' SEA GREEN JUNIPER	#5	CONT.	54" o.c.	
GRASSES							
	BG	226	BOUTELOUA GRACILIS BLUE GRAMA GRASS	#1	CONT.	14" o.c.	
	MC	106	MUHLENBERGIA CAPILLARIS PINK MUHLY GRASS	#1	CONT.	36" o.c.	
	PS2	115	PANICUM VIRGATUM 'SHENANDOAH' SHENANDOAH SWITCH GRASS	#1	CONT.	30" o.c.	
	SB	457	SCHIZACHYRIUM SCOPARIUM 'MINNBLUEA' BLUE HEAVEN® LITTLE BLUESTEM	#1	CONT.	24" o.c.	
	SH	218	SPOROBOLUS HETEROLEPIS PRAIRIE DROPSEED	#1	CONT.	24" o.c.	
PERENNIALS							
	AM	28	ALLIUM X 'MILLENIUM' MILLENIUM ORNAMENTAL ONION	#1	CONT.	14" o.c.	
	CB2	204	CAREX ELATA 'BOWLES GOLDEN' BOWLES GOLDEN SEDGE	#1	CONT.	24" o.c.	
	CP2	187	CAREX PENSYLVANICA PENNSYLVANIA SEDGE	#1	CONT.	12" o.c.	
	EC	207	ECHINACEA PURPUREA PURPLE CONEFLOWER	#1	CONT.	18" o.c.	
GREEN ROOF AREAS							
		708 SF	GREEN ROOF - SUNNY AREA				LIVE ROOF GREEN ROOF MIDWEST NATIVE PLANTS FOR SUNNY AREAS; STANDARD TRAY. SEDUM AS LIVING MULCH, DENSITY OF PLANTING - 2 PER MODULE.
	AS	118 SF	ALLIUM SCHOENOPRASUM COMMON CHIVES	N/A		16.66%	
	BC	118 SF	BOUTELOUA CURTIPENDULA SIDE OATS GRAMA	N/A		16.66%	
	GT	118 SF	GEUM TRIFLORUM PRAIRIE SMOKE	N/A		16.66%	
	KM	118 SF	KOELERIA MACRANTHA PRAIRIE JUNEGRASS	N/A		16.66%	
	SP3	118 SF	SEDUM SEXANGULARE VAR. ELATUM TASTELESS STONECROP	N/A		16.66%	
	SP4	118 SF	SEDUM SPURIUM 'ROYAL PINK' ROYAL PINK TWO ROW STONECROP	N/A		16.7%	
		366 SF	GREEN ROOF - SHADY AREA				LIVE ROOF GREEN ROOF MIDWEST NATIVE PLANTS FOR SHADY AREAS; STANDARD TRAY
	AC2	61 SF	ASTER CORDIFOLIUS BLUE WOOD ASTER	N/A		16.66%	
	CE2	61 SF	CAREX EBURNEA BRISTLELEAF SEDGE	N/A		16.66%	
	CR	61 SF	CAREX RADIATA EASTERN STAR SEDGE	N/A		16.66%	
	PW	61 SF	PHLOX DIVARICATA WOODLAND PHLOX	N/A		16.66%	
	SP5	61 SF	SEDUM SEXANGULARE VAR. ELATUM TASTELESS STONECROP	N/A		16.66%	
	SP6	61 SF	SEDUM SPURIUM 'ROYAL PINK' ROYAL PINK TWO ROW STONECROP	N/A		16.7%	
SEED MIXES							
	SM1	3,781 SF	SEED MIX 1 - STORMWATER BIOINFILTRATION + PLUGS				SEED ENTIRE AREA WITH STORMWATER BIOINFILTRATION MIX (6 PLS LBS/ACRE) AND FILL IN WITH PLUG VARIETY. PLUGS SHALL BE ARRANGED IN SINGLE SPECIES MASSES OF 9-15 PLANTS ALTERNATE MASSES OF SPECIES EVENLY THROUGHOUT BED. LAYOUT TO BE REVIEWED BY LANDSCAPE ARCHITECT IN FIELD BEFORE PLANTING.
	AI2	197	ASCLEPIAS INCARNATA SWAMP MILKWEED	PLUG		20% @ 24" o.c.	
	AN2	197	ASTER NOVAE-ANGLIAE NEW ENGLAND ASTER	PLUG		20% @ 24" o.c.	
	PV	197	PANICUM VIRGATUM SWITCH GRASS	PLUG		20% @ 24" o.c.	
	SB2	197	SCHIZACHYRIUM SCOPARIUM 'MINNBLUEA' BLUE HEAVEN® LITTLE BLUESTEM	PLUG		20% @ 24" o.c.	PLUG MASSES ONLY TO BE PLANTED IN OUTER 1/3 BORDER OF STORMWATER SWALE
	SP2	197	SPARTINA PECTINATA PRAIRIE CORDGRASS	PLUG		20% @ 24" o.c.	
	SM2	27,265 SF	SEED MIX 2 BEE LAWN	SEED			5 LBS/1,000 SQ FT
	SM3	9,103 SF	SEED MIX 3 TALL GRASS PRAIRIE WET MESIC NATIVE SEED	SEED			TALLGRASS PRAIRIES FOR WET MESIC SOILS; 10.75 PLS LBS/ACRE
GROUND COVERS							
		9,044 SF	DROUGHT-TOLERANT MINERAL SOD				DO NOT USE SOD NETTING, SEE SPECIFICATIONS FOR SPECIES

SITE SOILS SCHEDULE

SOIL PROFILE SYMBOL	DESCRIPTION	QTY	DEPTH	COMPOSITION	NOTES
SP-101	SOIL TYPE 01 - 18" DEPTH IMPORTED PLANTING SOIL	236.41 CY	18"	CONFORM TO "LOAM TOPSOIL BORROW" - SEE SPECIFICATIONS FOR USE IN PERENNIAL & SHRUB PLANTING BEDS	
SP-102	SOIL TYPE 02 - 4" DEPTH IMPORTED PLANTING SOIL	223.35 CY	4"	CONFORM TO "COMMON TOPSOIL BORROW" - SEE SPECIFICATIONS FOR USE IN HIGH TRAFFIC TURF/SOD	
SP-103	SOIL TYPE 03 - 6" DEPTH IMPORTED PLANTING SOIL	205.53 CY	6"	CONFORM TO "COMMON TOPSOIL BORROW" - SEE SPECIFICATIONS FOR USE IN BEE LAWN/NATIVE PRAIRIE SEEDED AREAS	
SP-104	SOIL TYPE 04 - 36" DEPTH IMPORTED PLANTING SOIL	254.26 CY	36"	CONFORM TO "LOAM TOPSOIL BORROW" - SEE SPECIFICATIONS FOR USE AT TREE PLANTINGS	
SP-105	SOIL TYPE 05 - INFILTRATION SOIL MIX. SEE CIVIL	CY		REFER TO CIVIL	
SP-106	SOIL TYPE 06 - EXISTING ON-SITE PLANTING SOIL - NATIVE/TURF AREAS, MODIFIED AS REQUIRED TO MEET SPECIFICATION REQUIREMENTS	486.29 CY	6"	CONFORM TO "COMMON TOPSOIL BORROW" - SEE SPECIFICATIONS FOR USE IN BEE LAWN/NATIVE PRAIRIE SEEDED AREAS	
SP-107	SOIL TYPE 07 - SOIL PREP BELOW EXISTING TREES - AIR SPADE/ROOT INVIGORRATION - REFER TO SOIL SPEC 329113	CY		AMEND INSITU SOILS - HAND WORK BELOW TREES, TOP DRESS 1/2" OF COMPOST AND BIOCHAR (50/50)	WHERE PLANTING IS TO OCCUR BELOW DRIPLINES, PREPARE SOILS WITH PNUEMATIC SOIL TOOL/AIR SPADE

WORKSHOP ARCHITECTS INC

201 E PITTSBURGH AVE #301
MILWAUKEE WI 53204

WORKSHOP ARCHITECTS — ARCHITECT
201 E PITTSBURGH AVENUE #301
MILWAUKEE, WI 53204

ROBERT E LEE & ASSOCIATES — CIVIL
1250 CENTENNIAL CENTRE BLVD
HOBART, WI 54155

DAMON FARBER — LANDSCAPE
25 WEST MAIN, SUITE 500
MADISON, WI 53703

SPIRE ENGINEERING — STRUCTURAL
305 PLANKINGTON AVE, STE 101
MILWAUKEE, WI 53203

RING & DUCHATEAU — MECHANICAL
17400 W CAPITOL DR
BROOKFIELD, WI 53045

RING & DUCHATEAU — ELECTRICAL
17400 W CAPITOL DR
BROOKFIELD, WI 53045

RING & DUCHATEAU — PLUMBING
17400 W CAPITOL DR
BROOKFIELD, WI 53045

RING & DUCHATEAU — FIRE PROTECTION
17400 W CAPITOL DR
BROOKFIELD, WI 53045

St. Norbert College
Facilities and Campus Planning

Project Location:
280 REID STREET
DE PERE, WISCONSIN 54115

SCHOOL OF BUSINESS
ST. NORBERT COLLEGE
DE PERE, WISCONSIN 54115

Sheet Title:
PLANTING + SOILS SCHEDULE

Revisions:

No.	Date:	By:	Description:
1	04/01/2024		ADDENDUM 1

Graphic Scale	AS INDICATED
WSA Number	23-332
Volume Number	
Issued For	100% CDS, BID, & PERMIT
Date Issued	04/01/2024
Sheet Number	L020

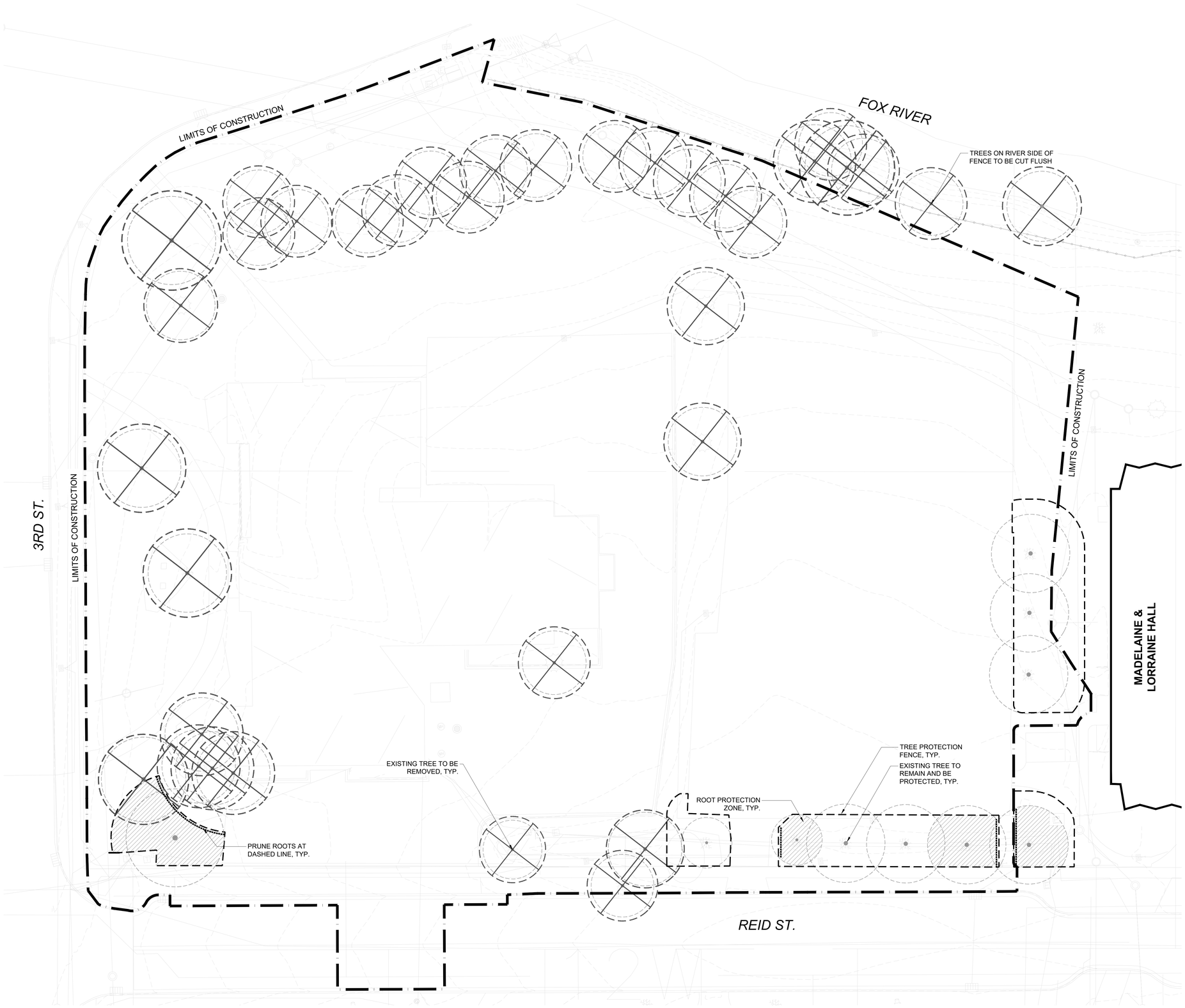

TREE PROTECTION AND REMOVAL LEGEND

SYMBOL	DESCRIPTION
	EXISTING TREE TO REMAIN AND BE PROTECTED
	REMOVE EXISTING TREE
	TREE PROTECTION FENCE - SEE TREE PROTECTION DETAILS
	ROOT PROTECTION ZONE
	TREE ROOTS TO BE PRUNED

TREE PRESERVATION NOTES

TREE PROTECTION

1. CONTRACTOR SHALL PRESERVE TREES SHOWN IN THE DRAWINGS TO BE PROTECTED AND PRESERVED. INSTALL TREE PROTECTION MEASURES PER DETAILS.
2. TREE PROTECTION MEASURES ARE TO BE INSTALLED PRIOR TO DEMOLITION AND SHALL BE MAINTAINED FOR THE DURATION OF THE CONSTRUCTION PERIOD.
3. NO WORK SHALL OCCUR IN TREE PROTECTION ZONES.
4. CONTRACTOR SHALL TAKE EXTRA PRECAUTIONS TO MINIMIZE DAMAGE TO TREES WHERE WORK IS DESIGNATED TO OCCUR WITHIN AND ADJACENT TO THE DRIPLINE OF TREES. REFER TO TREE PROTECTION DETAILS FOR TREE PROTECTION FENCE, TRUNK PROTECTION, AND PRUNING PRACTICES.

   4.1. EXCAVATION WORK WITHIN DRIPLINE OF TREES SHALL BE LIMITED TO HAND REMOVAL, DIRECTIONAL BORING, AND AIR KNIFE ONLY TO MINIMIZE DAMAGE TO ROOT SYSTEMS. SEE SPECIFICATIONS FOR DIRECTIONAL BORING DEPTHS WITHIN DRIPLINE OF TREES.

   4.2. WHERE WORK IS TO OCCUR WITHIN DRIPLINE OF TREES OR TREE PROTECTION ZONES, PROVIDE ROOT PRUNING AS CLEANLY CUT ROOTS PRIOR TO EXCAVATION OR TRENCHING ACTIVITIES. ROOT PRUNING TO BE PERFORMED BY ISA CERTIFIED ARBORIST FAMILIAR WITH ROOT PRUNING PRACTICES.

   4.3. PROTECT TRUNK AND BRANCHES FROM DAMAGE WHERE WORK IS DESIGNATED TO OCCUR WITHIN THE DRIPLINE OF TREES. PROVIDE TRUNK PROTECTION PER DETAILS.
5. CONTRACTOR SHALL NOT PLACE TEMPORARY STRUCTURES OR STORE MATERIALS IN TREE PROTECTION ZONES OR WITHIN THE DRIPLINE OF TREES.

ROOT PROTECTION

1. IN AREAS WHERE WORK OCCURS WITHIN DRIPLINE OF TREES AND IDENTIFIED AS ROOT PROTECTION ZONES, CONTRACTOR SHALL USE EXTRA PRECAUTION TO MINIMIZE DISTURBANCE TO ROOTS DURING CONSTRUCTION ACTIVITIES.
2. PROVIDE PROVIDE PROTECTIVE 4" ORGANIC WOOD MULCH LAYER BENEATH DRIPLINE, CLEAN ROOT CUTTING BY ISA CERTIFIED ARBORIST, AND LOW-IMPACT EXCAVATION MEASURES.
3. CONTRACTOR SHALL NOT STORE MATERIALS, EQUIPMENT, OR PARK VEHICLES IN ROOT PROTECTION ZONES.
4. TEMPORARY ACCESS AND MOVEMENT ACROSS ROOT PROTECTION ZONES AND OVER PROTECTIVE MULCH LAYER TO FACILITATE THE WORK MAY BE PERMITTED UPON PRIOR APPROVAL BY LANDSCAPE ARCHITECT. REPAIR PROTECTIVE MULCH LAYER DISTURBED BY CONSTRUCTION ACTIVITIES DURING THE DURATION OF THE WORK.

0 16 32 48
SCALE: 1" = 16'

NORTH

WORKSHOP ARCHITECTS INC
201 E PITTSBURGH AVE #301
MILWAUKEE WI 53204

WORKSHOP ARCHITECTS ARCHITECT
201 E PITTSBURGH AVENUE #301
MILWAUKEE, WI 53204

ROBERT E LEE & ASSOCIATES CIVIL
1250 CENTENNIAL CENTRE BLVD
HOBART, WI 54155

DAMON FARBER LANDSCAPE
25 WEST MAIN, SUITE 500
MADISON, WI 53703

SPIRE ENGINEERING STRUCTURAL
305 PLANKINGTON AVE, STE 101
MILWAUKEE, WI 53203

RING & DUCHATEAU MECHANICAL
17400 W CAPITOL DR
BROOKFIELD, WI 53045

RING & DUCHATEAU ELECTRICAL
17400 W CAPITOL DR
BROOKFIELD, WI 53045

RING & DUCHATEAU PLUMBING
17400 W CAPITOL DR
BROOKFIELD, WI 53045

RING & DUCHATEAU FIRE PROTECTION
17400 W CAPITOL DR
BROOKFIELD, WI 53045

St. Norbert College
Facilities and Campus Planning

Project Location:
290 REID STREET
DE PERE, WISCONSIN 54115

SCHOOL OF BUSINESS
ST. NORBERT COLLEGE
DE PERE, WISCONSIN 54115

Sheet Title:
TREE PROTECTION PLAN

Revisions:

No.	Date:	By:	Description:

Graphic Scale	AS INDICATED
WSA Number	23-332
Volume Number	
Issued For	100% CDS, BID, & PERMIT
Date Issued	03/04/2024
Sheet Number	L110

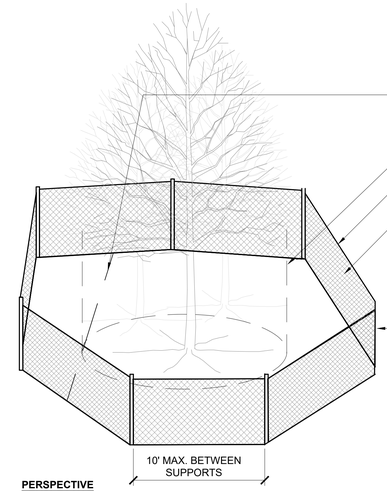

PERSPECTIVE

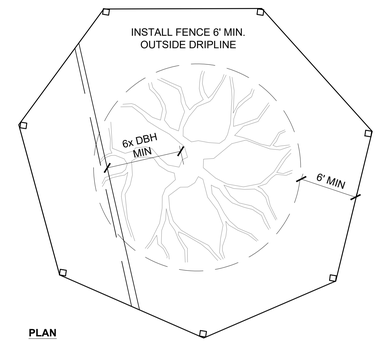

PLAN

WHERE GROUP OF TREES IS TO BE PROTECTED, PROTECT TREES AS MASS WITHIN SINGLE FENCE. DO NOT PROTECT INDIVIDUALLY.

IN LOCATIONS WHERE TREE PROTECTION FENCE CANNOT BE LOCATED 6' OUTSIDE DRIPLINE, PROVIDE CLEAN ROOT CUTTING, TRUNK PROTECTION, AND LOCATE FENCE ACCORDING TO PLANS

DRIPLINE VARIES

TENSIONER: COATED WIRE OR NYLONE ROPE TO KEEP FENCE TAUGHT

TREE PROTECTION FENCING: 48" CONSTRUCTION GRADE CHAIN LINK. FASTEN TO POSTS WITH GALVANIZED WIRE TIES

POSTS: 7' U-CHANNEL 1.12 LBS/FOOT STRENGTH PAINTED OR GALVANIZED

NOTES:

1. TREE PROTECTION FENCING SHALL BE INSTALLED PRIOR TO DEMOLITION IN LOCATIONS SHOWN ON PLANS AND SHALL BE MAINTAINED FOR THE DURATION OF THE CONSTRUCTION PERIOD.TREE PROTECTION FENCING SHALL NOT BE RELOCATED WITHOUT PRIOR APPROVAL FROM THE LANDSCAPE ARCHITECT.
2. CONTRACTOR SHALL NOT STORE MATERIALS, EQUIPMENT OR PARK VEHICLES IN TREE PROTECTION ZONES. THE FENCE SHALL PREVENT TRAFFIC MOVEMENT AND THE PLACEMENT OF TEMPORARY FACILITIES, EQUIPMENT, STOCKPILES AND SUPPLIES FROM HARMING VEGETATION WITHIN THE LIMITS OF PROTECTION.
3. WHERE WORK IS TO OCCUR WITHIN THE DRIPLINE OF AN EXISTING TREE, PLACE 4" DEPTH ORGANIC WOOD MULCH WITHIN TREE PROTECTION FENCING FOR MOISTURE PRESERVATION.
4. PLACE TREE PROTECTION WITHIN DRIPLINE WHEN FULL DRIPLINE PROTECTION IS NOT FEASIBLE DUE TO EXISTING PAVEMENT OR OTHER OBSTACLES. NOTIFY LANDSCAPE ARCHITECT OF LOCATIONS WHERE FULL PROTECTION IS NOT FEASIBLE.
5. WHERE TREE PROTECTION OCCURS WITHIN DRIPLINE OF TREE, WRAP TRUNK W/ 2X4X8 BOARDS SECURED TIGHTLY AROUND TRUNK WITH STRAP BINDINGS.
6. NO PRUNING SHALL BE PERFORMED EXCEPT WHERE APPROVED BY LANDSCAPE ARCHITECT AND PERFORMED BY A CERTIFIED ARBORIST.
7. REFER TO ROOT PRUNING AND DIRECTIONAL BORING DETAIL FOR PROTECTION MEASURES WHEN EXCAVATING, TRENCHING, OR DIRECTIONAL BORING IS TO OCCUR WITHIN THE DRIPLINE OF THE TREE.

3 DETAIL - TREE PROTECTION

1 1/2" = 1'-0"

P-ST-02

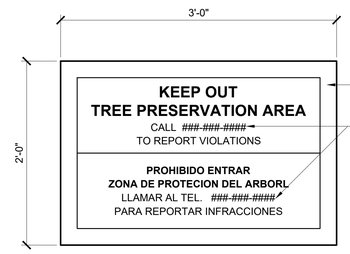

LAMINATED TREE PROTECTION SIGNAGE SPACED EVERY 50' ALONG FENCE

PROVIDE CONTACT INFORMATION FOR CONSTRUCTION PROJECT MANAGER

2 DETAIL - TREE PROTECTION SIGNAGE

1 1/2" = 1'-0"

P-ST-69

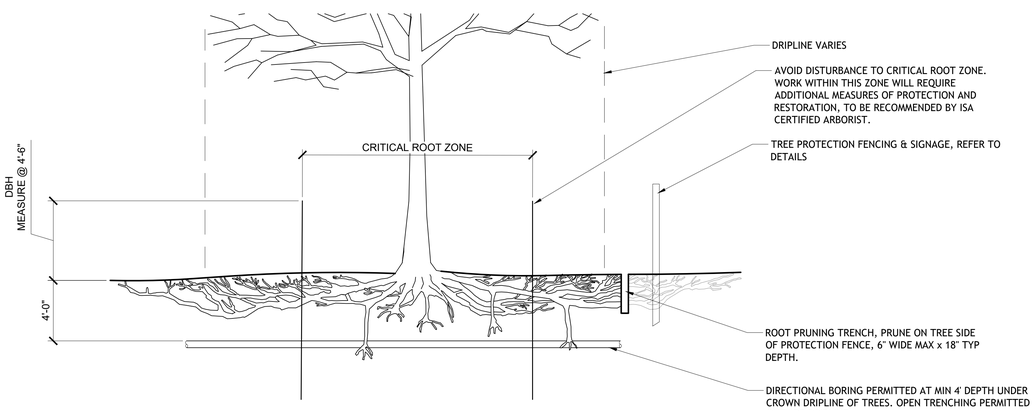

NOTES:

1. WHERE WORK IS TO OCCUR WITHIN THE DRIPLINE OF A TREE, CONTRACTOR TO USE AIR EXCAVATOR, DIRECTIONAL BORING, ROOT PRUNING, AND PRECAUTIONARY MEASURES AS DETAILED. ROOT PRUNING TO BE PERFORMED BY ISA CERTIFIED ARBORIST.
2. ROOT PRUNING SHALL BE DONE WITH A TRENCHER OR VIBRATORY PLOW TO A DEPTH OF 18". ROOTS OVER 1.5" DIA SHALL HAVE A CLEAN CUT MADE BY A CLEAN SAW ON SURFACE OF THE ROOT. DO NOT PAINT CUT ROOT ENDS.
3. FOR INSTALLATION OF UTILITIES WITHIN DRIPLINE OF TREE, LEAVE ROOTS IN TACT AND UTILIZE DIRECTIONAL BORING TO THREAD UTILITY LINES BENEATH.
4. ROOT PRUNING SHALL TAKE PLACE PRIOR TO CLEARING AND GRADING. STAKE LOCATIONS OF TREE PROTECTION PRIOR TO TRENCHING.
5. BACKFILL ROOT PRUNING TRENCHES WITH EXCAVATED SOIL AND MULCH. MARK LOCATIONS WITH STAKES FOR FUTURE REFERENCE. SILT FENCE MAY BE INSTALLED IN TRENCH PRIOR TO BACKFILLING AS LONG AS TRENCH IS NOT OPEN LONGER THAN 48HRS WITHOUT WATERING.
6. DO NOT PERFORM ROOT PRUNING WHEN SOIL IS WET OR WHEN TOP 1" OR MORE OF SOIL IS FROZEN.
7. AVOID DISTURBANCE WITHIN CRITICAL ROOT ZONE. CRITICAL ROOT ZONE SHALL BE MEASURED FROM TRUNK OUTWARD AND CALCULATED AS FOLLOWS:
   - DBH < 29.9" USE 1 FOOT RADIUS PER 1 INCH DBH, MIN 3' RADIUS
   - DBH > 30" USE 1.5 FOOT RADIUS PER 1 INCH DBH

4 ROOT PRUNING & DIRECTIONAL BORING DETAIL

1 1/2" = 1'-0"

P-ST-05

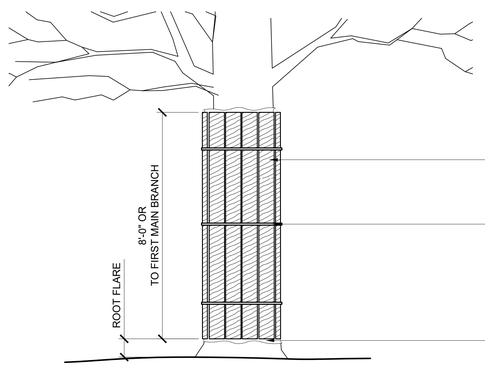

NOTES:
1. DO NOT FASTEN PLANKING DIRECTLY TO TREE TRUNK.

2. DO NOT INSTALL PLANKING ON ROOT FLARE.

PROTECTIVE PLANKING: 2x4x8 UNTREATED LUMBER, COMPLETELY AROUND TREE TRUNK.

MIN. 1/2" DIAMETER NATURAL ROPE OR NYLON STRAPS, TIGHTENED AROUND BOARDS. STAPLE TO BOARDS TO PREVENT SLIPPAGE. 3 STRAPS PER TREE TRUNK.

WRAP TREE WITH 3-5 LAYERS BURLAP COMPLETELY UNDER TREE PROTECTION BOARDS. PROVIDE 5 LAYERS ON THIN-BARKED TREES (E.G. SUGAR MAPLES)

1 DETAIL - TRUNK PROTECTION

1" = 1'-0"

P-ST-06

WORKSHOP ARCHITECTS INC

201 E PITTSBURGH AVE #301
MILWAUKEE WI 53204

WORKSHOP ARCHITECTS ARCHITECT
201 E PITTSBURGH AVENUE #301
MILWAUKEE, WI 53204

ROBERT E LEE & ASSOCIATES CIVIL
1250 CENTENNIAL CENTRE BLVD
HOBART, WI 54155

DAMON FARBER LANDSCAPE
25 WEST MAIN, SUITE 500
MADISON, WI 53703

SPIRE ENGINEERING STRUCTURAL
305 PLANKINGTON AVE, STE 101
MILWAUKEE, WI 53203

RING & DUCHATEAU MECHANICAL
17400 W CAPITOL DR
BROOKFIELD, WI 53045

RING & DUCHATEAU ELECTRICAL
17400 W CAPITOL DR
BROOKFIELD, WI 53045

RING & DUCHATEAU PLUMBING
17400 W CAPITOL DR
BROOKFIELD, WI 53045

RING & DUCHATEAU FIRE PROTECTION
17400 W CAPITOL DR
BROOKFIELD, WI 53045

St. Norbert College
Facilities and Campus Planning

Project Location:
290 REID STREET
DE PERE, WISCONSIN 54115

SCHOOL OF BUSINESS
ST. NORBERT COLLEGE
DE PERE, WISCONSIN 54115

Sheet Title:
TREE PROTECTION DETAILS

Revisions:

No.	Date:	By:	Description:

Graphic Scale	AS INDICATED
WSA Number	23-332
Volume Number	
Issued For	100% CDS, BID, & PERMIT
Date Issued	03/04/2024
Sheet Number	L111

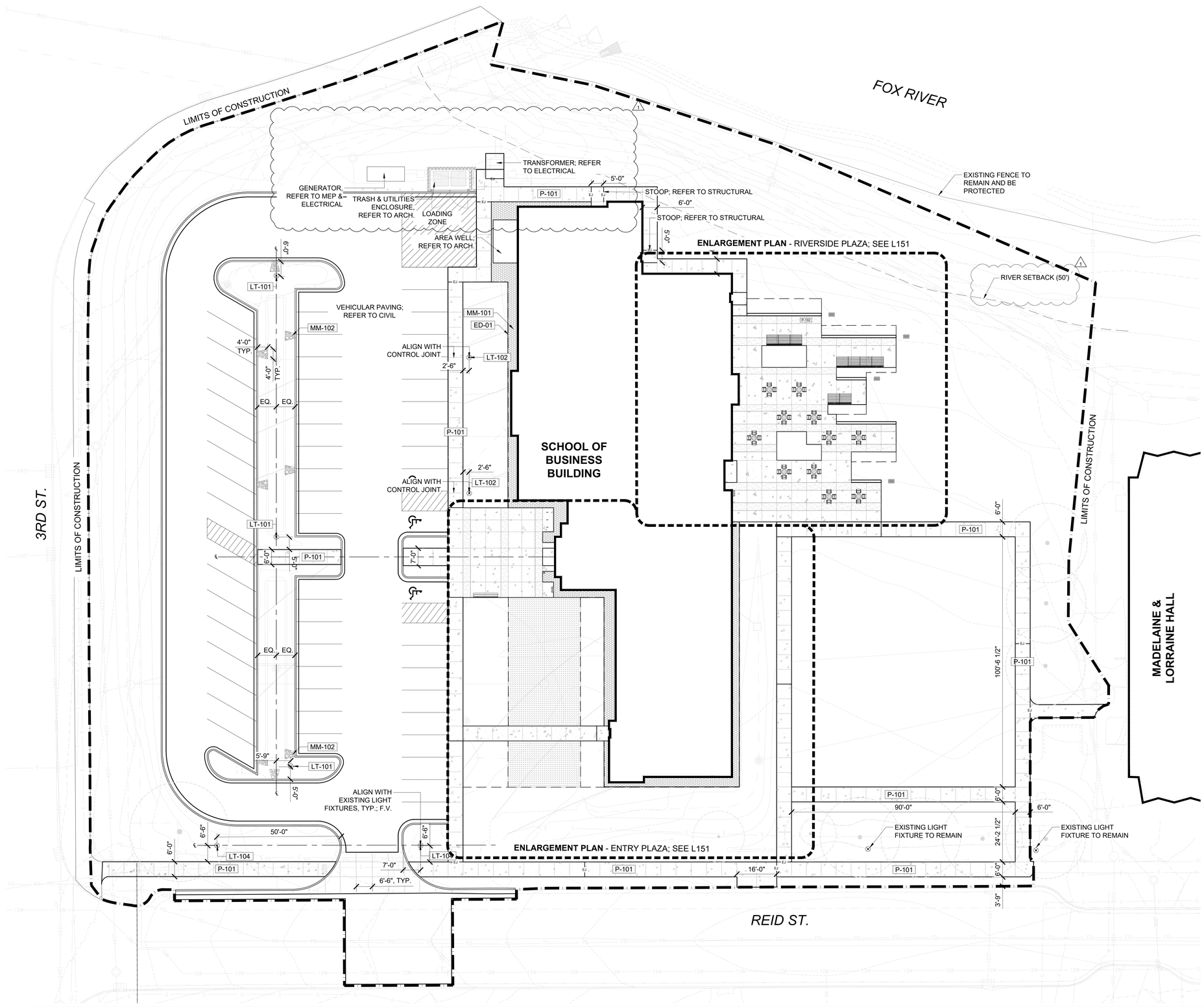

MATERIALS LEGEND

SYMBOL	EDGING DESCRIPTION
ED-01	EDGING TYPE 01 - STEEL EDGING
ED-02	EDGING TYPE 02 - DECORATIVE CONCRETE CURB

SYMBOL	LIGHTING DESCRIPTION
LT-101	LIGHTING TYPE 01 - 30' HGT.LED AREA LIGHT; CAMPUS STANDARD
LT-102	LIGHTING TYPE 02 - 14' HGT. ASYMMETRIC WIDE BEAM POLE TOP LUMINAIRE
LT-103	LIGHTING TYPE 03 - 10' HGT. ASYMMETRIC WIDE BEAM POLE TOP LUMINAIRE
LT-104	LIGHTING TYPE 04 - 10' HGT. DECORATIVE LANTERN POST-TOP; CAMPUS STANDARD
LT-105	LIGHTING TYPE 05 - GROUND MOUNT FLOOD LIGHT

SYMBOL	MISCELLANEOUS DESCRIPTION
M-101	MISC. SITE FEATURE - CHILDREN RELIC STATUE

SYMBOL	MINERAL MULCH DESCRIPTION
MM-101	MINERAL MULCH TYPE 01 - MAINTENANCE STRIP
MM-102	MINERAL MULCH TYPE 02 - STORMWATER SWALE MAINTENANCE STRIP
MM-103	MINERAL MULCH TYPE 03 - CRUSHED AGGREGATE

SYMBOL	PAVING DESCRIPTION
P-101	PAVING TYPE 01 - CONCRETE
P-102	PAVING TYPE 02 - DECORATIVE CONCRETE

SYMBOL	SITE FURNITURE DESCRIPTION
SF-101	SITE FURNITURE TYPE 05 - BICYLE RACK
SF-102	SITE FURNITURE TYPE 02 - BISTRO CHAIR BY OWNER
SF-103	SITE FURNITURE TYPE 03 - BISTRO TABLE BY OWNER
SF-104	SITE FURNITIURE TYPE 04 - DUAL STREAM RECEPTICAL BY OWNER
SF-105	SITE FURNITURE TYPE 05 - SUN LOUNGER
SF-106	SITE FURNITURE TYPE 06 - ENTRY PLAZA BENCH

GENERAL NOTE:

PROVE (4) MOCK-UPS FOR THE FOLLOWING GRADE OF ETCH LEVELS FOR DECORATIVE CONCRETE (P-102) AND (ED-02) FOR OWNER AND ARCHITECT REVIEW PRIOR TO FINAL INSTALLATION:

1) (P-02) NO COLOR, MICRO ETCH, LEVEL 3 VIOLET, 1/2 WITH PENETRATING PROTECTOR 1/2 WITHOUT PENETRATING PROTECTOR
2) (P-02) NO COLOR, MICRO ETCH, LEVEL 5 LIGHT BLUE, 1/2 WITH PENETRATING PROTECTOR 1/2 WITHOUT PENETRATING PROTECTOR
3) (ED-02) NO COLOR, MICRO ETCH, LEVEL 3 VIOLET, 1/2 WITH PENETRATING PROTECTOR 1/2 WITHOUT PENETRATING PROTECTOR
4) (ED-02) NO COLOR, MICRO ETCH, LEVEL 5 LIGHT BLUE, 1/2 WITH PENETRATING PROTECTOR 1/2 WITHOUT PENETRATING PROTECTOR

0 16 32 48
SCALE: 1" = 16'

NORTH

WORKSHOP ARCHITECTS INC
201 E PITTSBURGH AVE #301
MILWAUKEE WI 53204

WORKSHOP ARCHITECTS ARCHITECT
201 E PITTSBURGH AVENUE #301
MILWAUKEE, WI 53204

ROBERT E LEE & ASSOCIATES CIVIL
1250 CENTENNIAL CENTRE BLVD
HOBART, WI 54155

DAMON FARBER LANDSCAPE
25 WEST MAIN, SUITE 500
MADISON, WI 53703

SPIRE ENGINEERING STRUCTURAL
305 PLANKINGTON AVE, STE 101
MILWAUKEE, WI 53203

RING & DUCHATEAU MECHANICAL
17400 W CAPITOL DR
BROOKFIELD, WI 53045

RING & DUCHATEAU ELECTRICAL
17400 W CAPITOL DR
BROOKFIELD, WI 53045

RING & DUCHATEAU PLUMBING
17400 W CAPITOL DR
BROOKFIELD, WI 53045

RING & DUCHATEAU FIRE PROTECTION
17400 W CAPITOL DR
BROOKFIELD, WI 53045

St. Norbert College
Facilities and Campus Planning

Project Location:
290 REID STREET
DE PERE, WISCONSIN 54115

SCHOOL OF BUSINESS
ST. NORBERT COLLEGE
DE PERE, WISCONSIN 54115

Sheet Title:
LAYOUT AND MATERIALS PLAN

Revisions:

No.	Date:	By:	Description:
1	04/01/2024		ADDENDUM 1

Graphic Scale	AS INDICATED
WSA Number	23-332
Volume Number	
Issued For	100% CDS, BID, & PERMIT
Date Issued	04/01/2024
Sheet Number	L120

MATERIALS LEGEND

SYMBOL	EDGING DESCRIPTION
ED-01	EDGING TYPE 01 - STEEL EDGING
ED-02	EDGING TYPE 02 - DECORATIVE CONCRETE CURB

SYMBOL	LIGHTING DESCRIPTION
LT-101	LIGHTING TYPE 01 - 30' HGT.LED AREA LIGHT; CAMPUS STANDARD
LT-102	LIGHTING TYPE 02 - 14' HGT. ASYMMETRIC WIDE BEAM POLE TOP LUMINAIRE
LT-103	LIGHTING TYPE 03 - 10' HGT. ASYMMETRIC WIDE BEAM POLE TOP LUMINAIRE
LT-104	LIGHTING TYPE 04 - 10' HGT. DECORATIVE LANTERN POST-TOP; CAMPUS STANDARD
LT-105	LIGHTING TYPE 05 - GROUND MOUNT FLOOD LIGHT

SYMBOL	MISCELLANEOUS DESCRIPTION
M-101	MISC. SITE FEATURE - CHILDREN RELIC STATUE

SYMBOL	MINERAL MULCH DESCRIPTION
MM-101	MINERAL MULCH TYPE 01 - MAINTENANCE STRIP
MM-102	MINERAL MULCH TYPE 02 - STORMWATER SWALE MAINTENANCE STRIP
MM-103	MINERAL MULCH TYPE 03 - CRUSHED AGGREGATE

SYMBOL	PAVING DESCRIPTION
P-101	PAVING TYPE 01 - CONCRETE
P-102	PAVING TYPE 02 - DECORATIVE CONCRETE

SYMBOL	SITE FURNITURE DESCRIPTION
SF-101	SITE FURNITURE TYPE 05 - BICYLE RACK
SF-102	SITE FURNITURE TYPE 02 - BISTRO CHAIR BY OWNER
SF-103	SITE FURNITURE TYPE 03 - BISTRO TABLE BY OWNER
SF-104	SITE FURNITIURE TYPE 04 - DUAL STREAM RECEPTICAL BY OWNER
SF-105	SITE FURNITURE TYPE 05 - SUN LOUNGER
SF-106	SITE FURNITURE TYPE 06 - ENTRY PLAZA BENCH

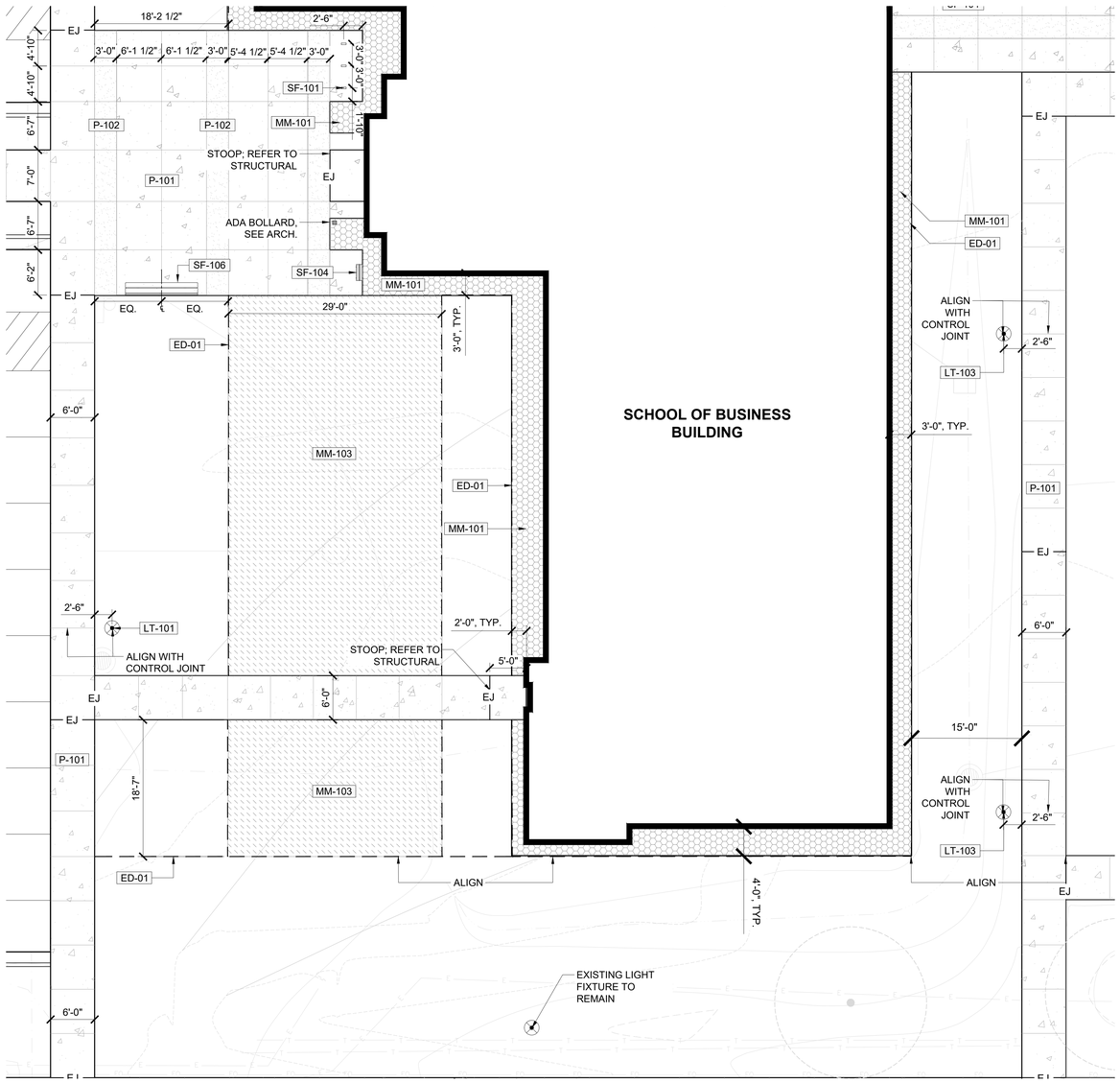

MATERIALS AND LAYOUT ENLARGEMENT - ENTRY PLAZA

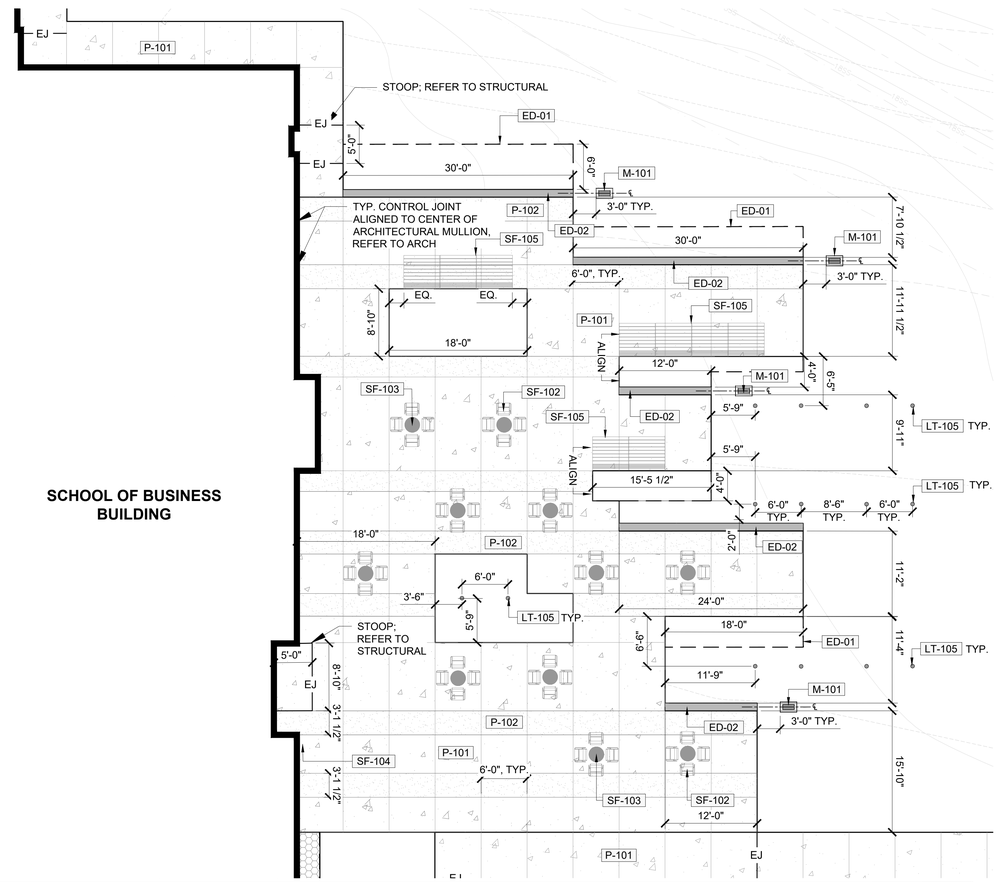

MATERIALS AND LAYOUT ENLARGEMENT - RIVERSIDE PLAZA

SCALE: 1" = 8'

NORTH

WORKSHOP ARCHITECTS INC
201 E PITTSBURGH AVE #301
MILWAUKEE WI 53204

WORKSHOP ARCHITECTS ARCHITECT
201 E PITTSBURGH AVENUE #301
MILWAUKEE, WI 53204

ROBERT E LEE & ASSOCIATES CIVIL
1250 CENTENNIAL CENTRE BLVD
HOBART, WI 54155

DAMON FARBER LANDSCAPE
25 WEST MAIN, SUITE 500
MADISON, WI 53703

SPIRE ENGINEERING STRUCTURAL
305 PLANKINGTON AVE, STE 101
MILWAUKEE, WI 53203

RING & DUCHATEAU MECHANICAL
17400 W CAPITOL DR
BROOKFIELD, WI 53045

RING & DUCHATEAU ELECTRICAL
17400 W CAPITOL DR
BROOKFIELD, WI 53045

RING & DUCHATEAU PLUMBING
17400 W CAPITOL DR
BROOKFIELD, WI 53045

RING & DUCHATEAU FIRE PROTECTION
17400 W CAPITOL DR
BROOKFIELD, WI 53045

St. Norbert College
Facilities and Campus Planning

Project Location:
290 REID STREET
DE PERE, WISCONSIN 54115

SCHOOL OF BUSINESS
ST. NORBERT COLLEGE
DE PERE, WISCONSIN 54115

Sheet Title:
LAYOUT AND MATERIALS PLAN - ENTRY AND RIVERSIDE PLAZA

Revisions:

No.	Date:	By:	Description:

Graphic Scale	AS INDICATED
WSA Number	23-332
Volume Number	
Issued For	100% CDS, BID, & PERMIT
Date Issued	03/04/2024
Sheet Number	L121

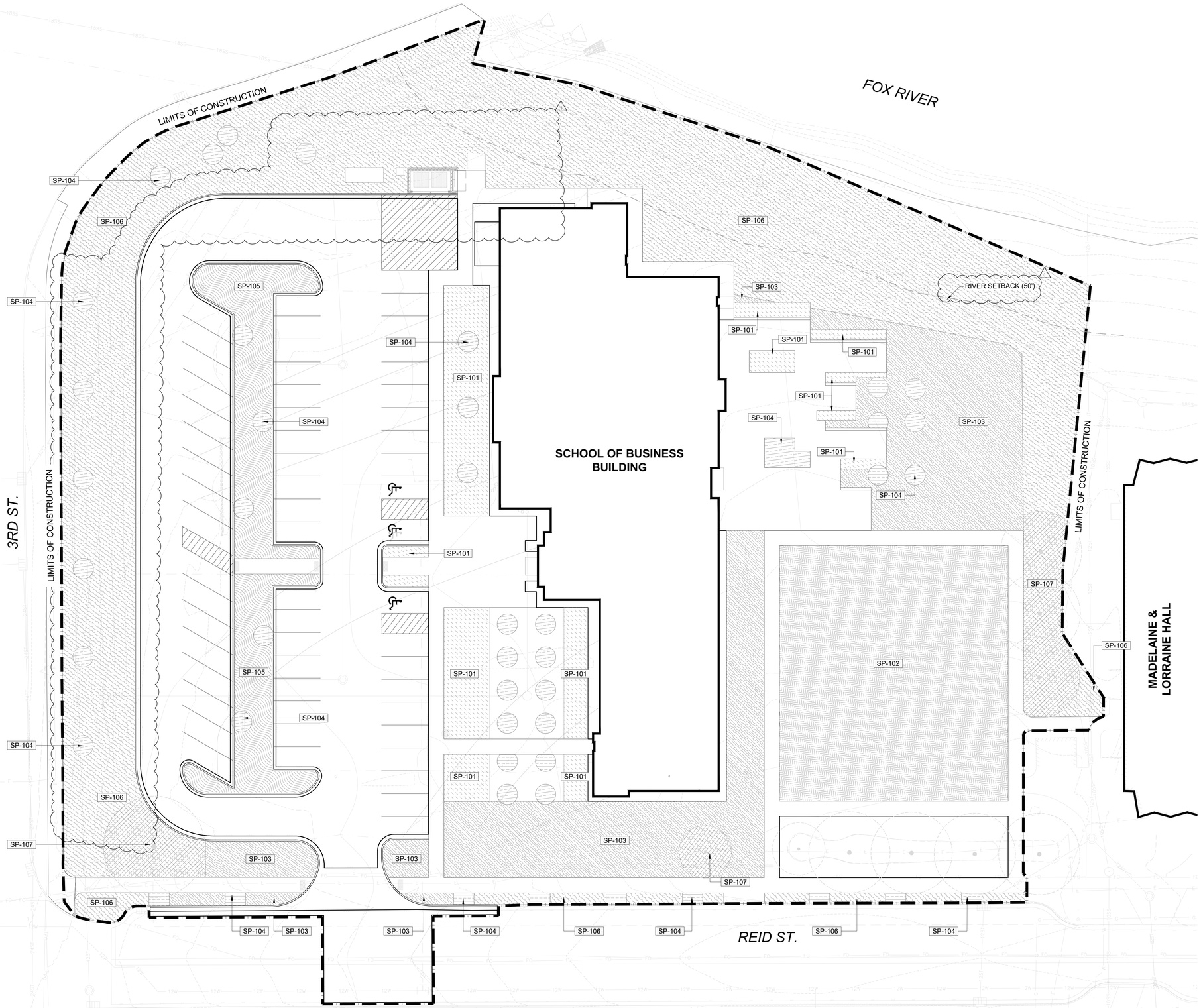

SITE SOILS LEGEND

SYMBOL	DESCRIPTION
SP-101	SOIL TYPE 01 - 18" DEPTH IMPORTED PLANTING SOIL
SP-102	SOIL TYPE 02 - 4" DEPTH IMPORTED PLANTING SOIL
SP-103	SOIL TYPE 03 - 6" DEPTH IMPORTED PLANTING SOIL
SP-104	SOIL TYPE 04 - 36" DEPTH IMPORTED PLANTING SOIL
SP-105	SOIL TYPE 05 - INFILTRATION SOIL MIX, SEE CIVIL
SP-106	SOIL TYPE 06 - EXISTING ON-SITE PLANTING SOIL - NATIVE/TURF AREAS, MODIFIED AS REQUIRED TO MEET SPECIFICATION REQUIREMENTS
SP-107	SOIL TYPE 07 - SOIL PREP BELOW EXISTING TREES - AIR SPADE/ROOT INVIGORRATION - REFER TO SOIL SPEC 329113

SITE SOILS NOTES:

1. PROVIDE SUBGRADE DECOMPACTION VIA DEEP TILLING TO A DEPTH OF 18" IN FORMER PARKING LOT LOCATIONS AND AREAS COMPACTED DUE TO CONSTRUCTION ACTIVITIES PRIOR TO SOILS PLACEMENT. REFER TO SOILS SPECIFICATION FOR DECOMPACTION INFORMATION.
2. SEE SPECIFICATION 32-9113 FOR ADDITIONAL INFORMATION ON SOIL PREPARATION REQUIREMENTS.
3. PROTECT EXISTING SOILS NOT DISTURBED BY CONSTRUCTION. IN UNDISTURBED AREAS TO BE CONVERTED TO NATIVE SEED OR RETAINED AS TURF, RETAIN EXISTING SOIL AND AMEND AND PREPARE PER SPECIFICATION.
4. STRIP, STOCKPILE, AND PROTECT EXISTING TOPSOIL IN AREAS OF DISTURBANCE. EXISTING SOIL TO BE AMENDED PER SPECIFICATION AND RE-SPREAD OVER PROPOSED TURF PLANTING AREAS.
5. PREPARE SOILS BY HAND RAKING OR MANUAL HARROW BELOW DRIPLINE OF EXISTING TREES TO MINIMIZE IMPACT TO ROOT SYSTEMS. DO NOT USE HEAVY EQUIPMENT OR MECHANICAL TILLING. DO NOT DRIVE EQUIPMENT UNDER OR WITHIN DRIP LINE OF EXISTING TREES.

0 16 32 48
SCALE: 1" = 16'

NORTH

WORKSHOP
WORKSHOP ARCHITECTS INC
201 E PITTSBURGH AVE #301
MILWAUKEE WI 53204

WORKSHOP ARCHITECTS ARCHITECT
201 E PITTSBURGH AVENUE #301
MILWAUKEE, WI 53204

ROBERT E LEE & ASSOCIATES CIVIL
1250 CENTENNIAL CENTRE BLVD
HOBART, WI 54155

DAMON FARBER LANDSCAPE
25 WEST MAIN, SUITE 500
MADISON, WI 53703

SPIRE ENGINEERING STRUCTURAL
305 PLANKINGTON AVE, STE 101
MILWAUKEE, WI 53203

RING & DUCHATEAU MECHANICAL
17400 W CAPITOL DR
BROOKFIELD, WI 53045

RING & DUCHATEAU ELECTRICAL
17400 W CAPITOL DR
BROOKFIELD, WI 53045

RING & DUCHATEAU PLUMBING
17400 W CAPITOL DR
BROOKFIELD, WI 53045

RING & DUCHATEAU FIRE PROTECTION
17400 W CAPITOL DR
BROOKFIELD, WI 53045

St. Norbert College
Facilities and Campus
Planning

Project Location:
290 REID STREET
DE PERE, WISCONSIN 54115

SCHOOL OF BUSINESS
ST. NORBERT COLLEGE
DE PERE, WISCONSIN 54115

Sheet Title:
SOILS PLAN

Revisions:

No.	Date:	By:	Description:
1	04/01/2024		ADDENDUM 1

Graphic Scale	AS INDICATED
WSA Number	23-332
Volume Number	
Issued For	100% CDS, BID, & PERMIT
Date Issued	04/01/2024
Sheet Number	L130

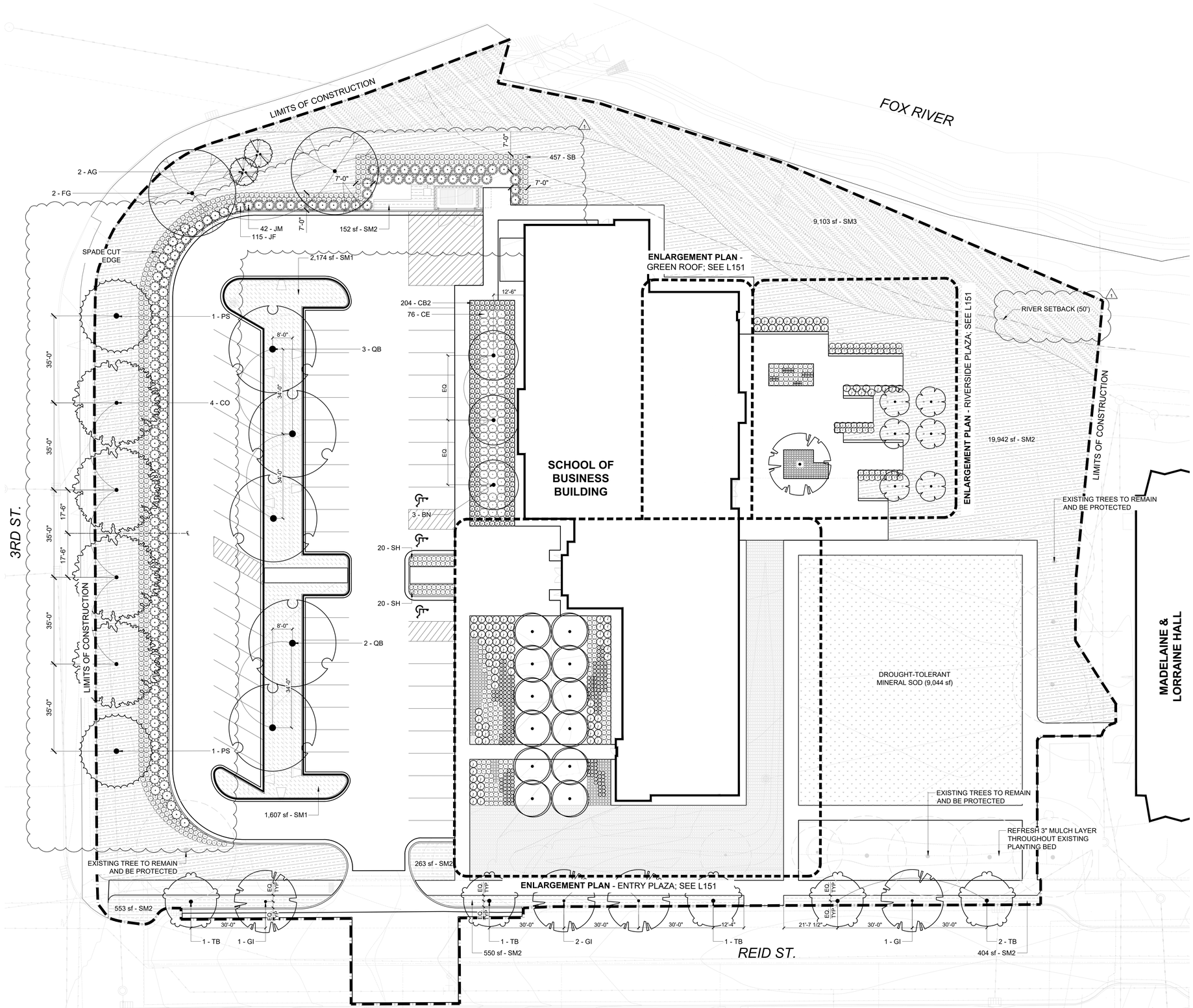

PLANT LEGEND - TREES

SYMBOL	CODE	QTY	BOTANICAL / COMMON NAME
CONIFERS			
	PS	2	PINUS STROBUS WHITE PINE
DECIDUOUS TREES			
	BN	3	BETULA NIGRA RIVER BIRCH
	CO	4	CELTIS OCCIDENTALIS COMMON HACKBERRY
	FG	2	FAGUS GRANDIFOLIA AMERICAN BEECH
	GI	5	GLEDITSIA TRIACANTHOS INERMIS 'SKYCOLE' SKYLINE® HONEY LOCUST
	PP	12	POPULUS TREMULOIDES 'NE ARB' PRAIRIE GOLD® QUAKING ASPEN
	QB	5	QUERCUS BICOLOR SWAMP WHITE OAK
	TB	5	TILIA AMERICANA 'BOULEVARD' BOULEVARD AMERICAN LINDEN
FRUIT TREES			
	PR	6	PRUNUS PERSICA 'RELIANCE' RELIANCE PEACH
ORNAMENTAL TREES			
	AG	2	AMELANCHIER X GRANDIFLORA 'AUTUMN BRILLIANCE' AUTUMN BRILLIANCE APPLE SERVICEBERRY

PLANT LEGEND - UNDERSTORY

SYMBOL	CODE	QTY	BOTANICAL / COMMON NAME
DECIDUOUS SHRUBS			
	CE	76	CORNUS SERICEA 'ARCTIC FIRE' ARCTIC FIRE RED TWIG DOGWOOD
EVERGREEN SHRUBS			
	JM	42	JUNIPERUS CHINENSIS 'MANEYI' MANEY JUNIPER
	JF	115	JUNIPERUS CHINENSIS 'SEA GREEN' SEA GREEN JUNIPER
GRASSES			
	BG	226	BOUTELOUA GRACILIS BLUE GRAMA GRASS
	MC	106	MUHLENBERGIA CAPILLARIS PINK MUHLY GRASS
	PS2	115	PANICUM VIRGATUM 'SHENANDOAH' SHENANDOAH SWITCH GRASS
	SB	457	SCHIZACHYRIUM SCOPARIUM 'MINNBLUEA' BLUE HEAVEN® LITTLE BLUESTEM
	SH	218	SPOROBOLUS HETEROLEPIS PRAIRIE DROPSEED
PERENNIALS			
	AM	28	ALLIUM X 'MILLENIUM' MILLENIUM ORNAMENTAL ONION
	CB2	204	CAREX ELATA 'BOWLES GOLDEN' BOWLES GOLDEN SEDGE
	CP2	187	CAREX PENSYLVANICA PENNSYLVANIA SEDGE
	EC	207	ECHINACEA PURPUREA PURPLE CONEFLOWER
GREEN ROOF AREAS			
		708 SF	GREEN ROOF - SUNNY AREA
		366 SF	GREEN ROOF - SHADY AREA
SEED MIXES			
	SM1	3,781 SF	SEED MIX 1 STORMWATER BIOINFILTRATION + PLUGS
	SM2	27,265 SF	SEED MIX 2 BEE LAWN
	SM3	9,103 SF	SEED MIX 3 TALL GRASS PRAIRIE WET MESIC NATIVE SEED
GROUND COVERS			
		9,044 SF	DROUGHT-TOLERANT MINERAL SOD

EROSION CONTROL FOR SEEDED AREAS:

1. PROVIDE CERTIFIED WEED-FREE STRAW MULCH AT 1.5 TONS/ACRE ON SLOPES LESS THAN 3:1. ON SLOPES 3:1 AND GREATER, PROVIDE FULLY BIODEGRADABLE EROSION CONTROL BLANKET.

0 16 32 48
SCALE: 1" = 16'

NORTH

WORKSHOP ARCHITECTS INC
201 E PITTSBURGH AVE #301
MILWAUKEE WI 53204

WORKSHOP ARCHITECTS — ARCHITECT
201 E PITTSBURGH AVENUE #301
MILWAUKEE, WI 53204

ROBERT E LEE & ASSOCIATES — CIVIL
1250 CENTENNIAL CENTRE BLVD
HOBART, WI 54155

DAMON FARBER — LANDSCAPE
25 WEST MAIN, SUITE 500
MADISON, WI 53703

SPIRE ENGINEERING — STRUCTURAL
305 PLANKINGTON AVE, STE 101
MILWAUKEE, WI 53203

RING & DUCHATEAU — MECHANICAL
17400 W CAPITOL DR
BROOKFIELD, WI 53045

RING & DUCHATEAU — ELECTRICAL
17400 W CAPITOL DR
BROOKFIELD, WI 53045

RING & DUCHATEAU — PLUMBING
17400 W CAPITOL DR
BROOKFIELD, WI 53045

RING & DUCHATEAU — FIRE PROTECTION
17400 W CAPITOL DR
BROOKFIELD, WI 53045

St. Norbert College
Facilities and Campus Planning

Project Location:
290 REID STREET
DE PERE, WISCONSIN 54115

SCHOOL OF BUSINESS
ST. NORBERT COLLEGE
DE PERE, WISCONSIN 54115

Sheet Title:
PLANTING PLAN

Revisions:

No.	Date:	By:	Description:
1	04/01/2024		ADDENDUM 1

Graphic Scale	AS INDICATED
WSA Number	23-332
Volume Number	
Issued For	100% CDS, BID, & PERMIT
Date Issued	04/01/2024
Sheet Number	L150

PLANT LEGEND - TREES

SYMBOL	CODE	QTY	BOTANICAL / COMMON NAME
CONIFERS			
	PS	2	PINUS STROBUS WHITE PINE
DECIDUOUS TREES			
	BN	3	BETULA NIGRA RIVER BIRCH
	CO	3	CELTIS OCCIDENTALIS COMMON HACKBERRY
	FG	2	FAGUS GRANDIFOLIA AMERICAN BEECH
	GI	5	GLEDITSIA TRIACANTHOS INERMIS 'SKYCOLE' SKYLINE® HONEY LOCUST
	PP	12	POPULUS TREMULOIDES 'NE ARB' PRAIRIE GOLD® QUAKING ASPEN
	QB	5	QUERCUS BICOLOR SWAMP WHITE OAK
	TB	5	TILIA AMERICANA 'BOULEVARD' BOULEVARD AMERICAN LINDEN
FRUIT TREES			
	PR	6	PRUNUS PERSICA 'RELIANCE' RELIANCE PEACH
ORNAMENTAL TREES			
	AG	2	AMELANCHIER X GRANDIFLORA 'AUTUMN BRILLIANCE' AUTUMN BRILLIANCE APPLE SERVICEBERRY

PLANT LEGEND - UNDERSTORY

SYMBOL	CODE	QTY	BOTANICAL / COMMON NAME
DECIDUOUS SHRUBS			
	CE	76	CORNUS SERICEA 'ARCTIC FIRE' ARCTIC FIRE RED TWIG DOGWOOD
EVERGREEN SHRUBS			
	JF	92	JUNIPERUS CHINENSIS 'SEA GREEN' SEA GREEN JUNIPER
GRASSES			
	BG	226	BOUTELOUA GRACILIS BLUE GRAMA GRASS
	MC	106	MUHLENBERGIA CAPILLARIS PINK MUHLY GRASS
	PS2	115	PANICUM VIRGATUM 'SHENANDOAH' SHENANDOAH SWITCH GRASS
	SB	301	SCHIZACHYRIUM SCOPARIUM 'MINNBLUEA' BLUE HEAVEN® LITTLE BLUESTEM
	SH	218	SPOROBOLUS HETEROLEPIS PRAIRIE DROPSEED
PERENNIALS			
	AM	28	ALLIUM X 'MILLENIUM' MILLENIUM ORNAMENTAL ONION
	CB2	204	CAREX ELATA 'BOWLES GOLDEN' BOWLES GOLDEN SEDGE
	CP2	187	CAREX PENSYLVANICA PENNSYLVANIA SEDGE
	EC	207	ECHINACEA PURPUREA PURPLE CONEFLOWER
GREEN ROOF AREAS			
		708 SF	GREEN ROOF - SUNNY AREA
		366 SF	GREEN ROOF - SHADY AREA
SEED MIXES			
	SM1	3,781 SF	SEED MIX 1 STORMWATER BIOINFILTRATION + PLUGS
	SM2	28,419 SF	SEED MIX 2 BEE LAWN
	SM3	9,103 SF	SEED MIX 3 TALL GRASS PRAIRIE WET MESIC NATIVE SEED
GROUND COVERS			
		9,044 SF	DROUGHT-TOLERANT MINERAL SOD

EROSION CONTROL FOR SEEDED AREAS:

1. PROVIDE CERTIFIED WEED-FREE STRAW MULCH AT 1.5 TONS/ACRE ON SLOPES LESS THAN 3:1. ON SLOPES 3:1 AND GREATER, PROVIDE FULLY BIODEGRADABLE EROSION CONTROL BLANKET.

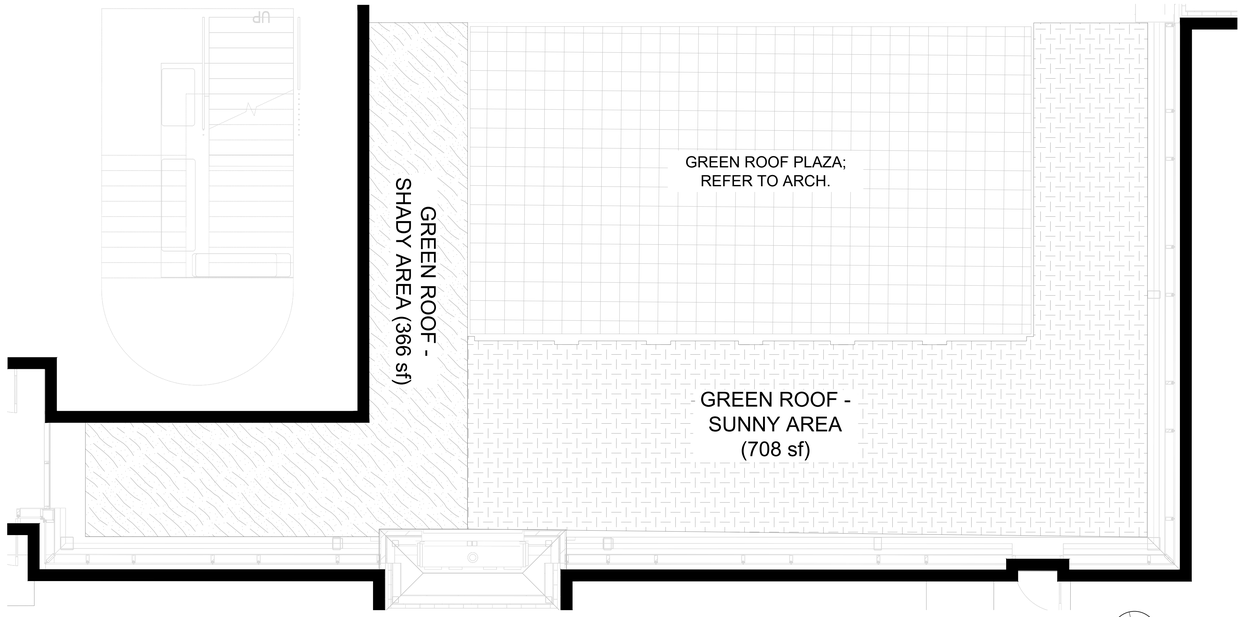

PLANTING ENLARGEMENT - GREEN ROOF

1" = 4'

NORTH

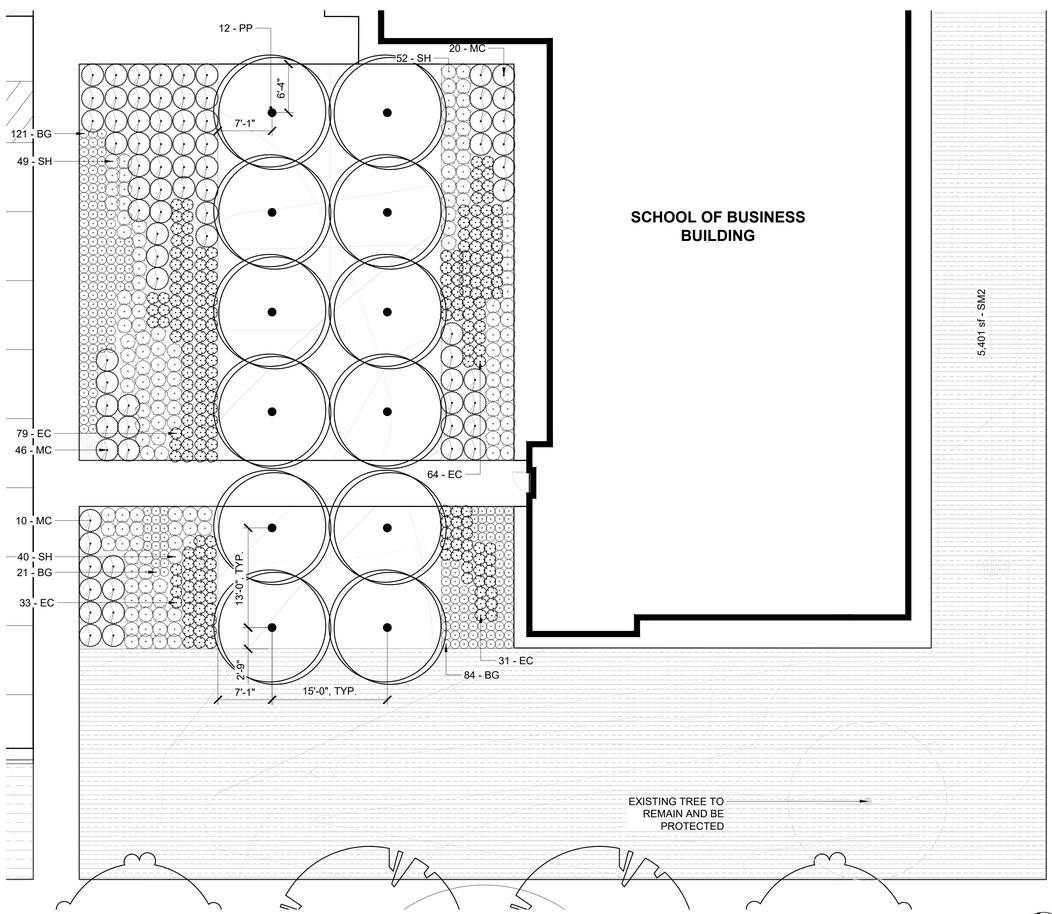

PLANTING ENLARGEMENT - ENTRY PLAZA

1" = 8'

NORTH

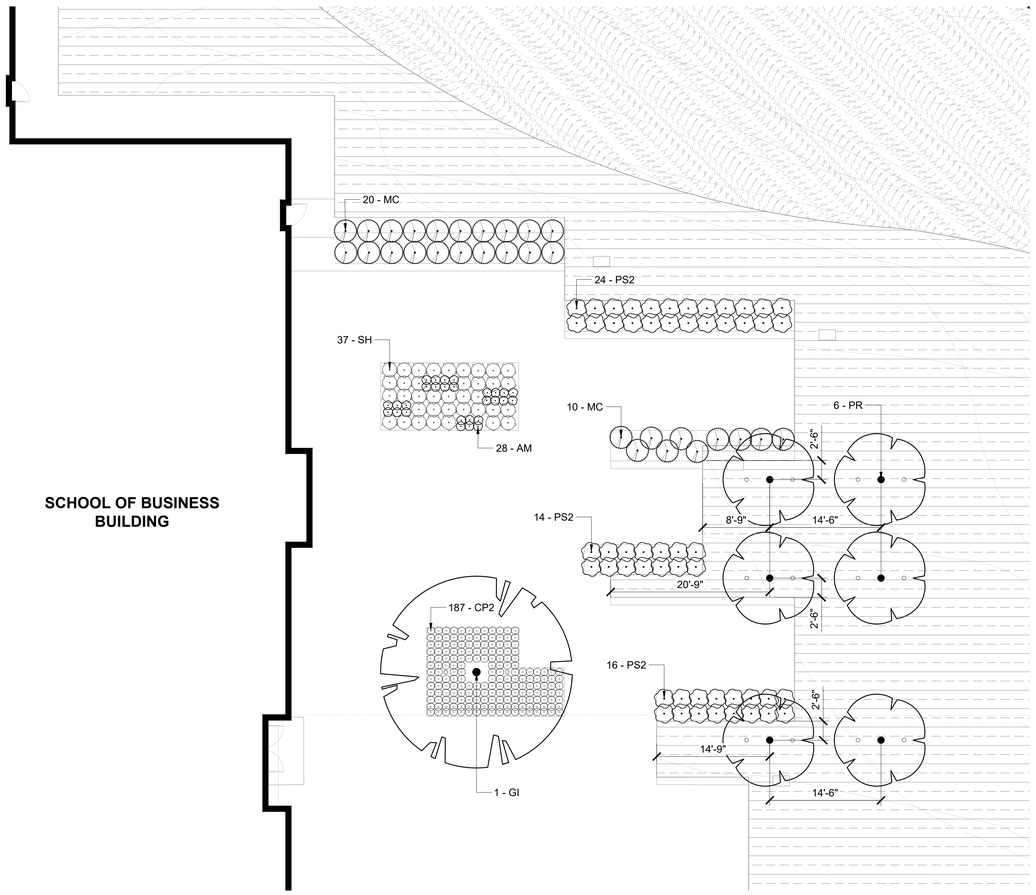

PLANTING ENLARGEMENT - RIVERSIDE PLAZA

1" = 8'

NORTH

WORKSHOP
WORKSHOP ARCHITECTS INC
201 E PITTSBURGH AVE #301
MILWAUKEE WI 53204

WORKSHOP ARCHITECTS ARCHITECT
201 E PITTSBURGH AVENUE #301
MILWAUKEE, WI 53204

ROBERT E LEE & ASSOCIATES CIVIL
1250 CENTENNIAL CENTRE BLVD
HOBART, WI 54155

DAMON FARBER LANDSCAPE
25 WEST MAIN, SUITE 500
MADISON, WI 53703

SPIRE ENGINEERING STRUCTURAL
305 PLANKINGTON AVE, STE 101
MILWAUKEE, WI 53203

RING & DUCHATEAU MECHANICAL
17400 W CAPITOL DR
BROOKFIELD, WI 53045

RING & DUCHATEAU ELECTRICAL
17400 W CAPITOL DR
BROOKFIELD, WI 53045

RING & DUCHATEAU PLUMBING
17400 W CAPITOL DR
BROOKFIELD, WI 53045

RING & DUCHATEAU FIRE PROTECTION
17400 W CAPITOL DR
BROOKFIELD, WI 53045

St. Norbert College
Facilities and Campus Planning

Project Location:
290 REID STREET
DE PERE, WISCONSIN 54115

SCHOOL OF BUSINESS
ST. NORBERT COLLEGE
DE PERE, WISCONSIN 54115

Sheet Title:
PLANTING PLAN - ENTRY AND RIVERSIDE PLAZA

Revisions:

No.	Date:	By:	Description:

Graphic Scale	AS INDICATED
WSA Number	23-332
Volume Number	
Issued For	100% CDS, BID, & PERMIT
Date Issued	03/04/2024
Sheet Number	L151

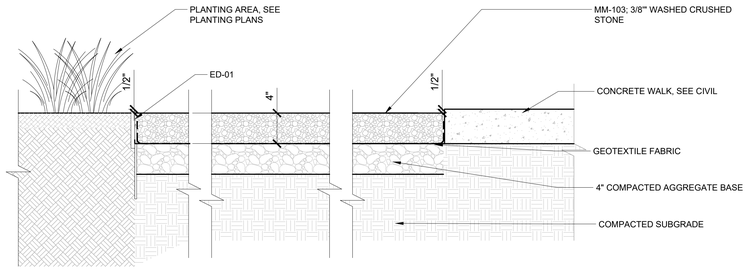

7 DETAIL - MINERAL MULCH 03 - MM-103

1 1/2" = 1'-0" P-ST-14

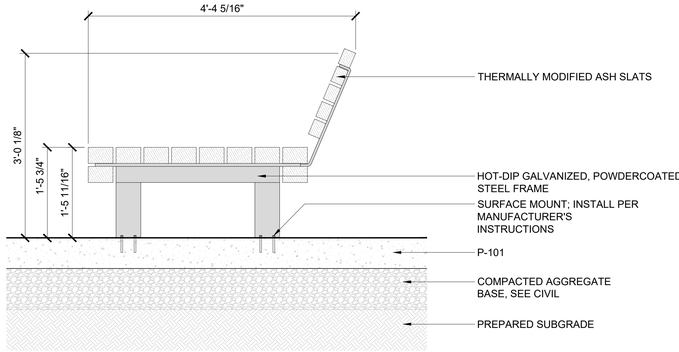

4 DETAIL - SUN LOUNGER - SF-105

1" = 1'-0" P-ST-11

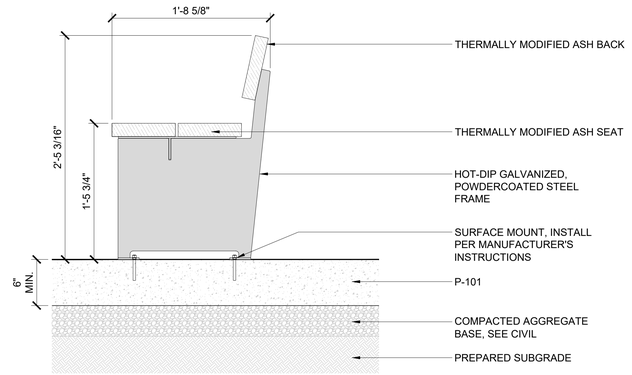

3 DETAIL-ENTRY PLAZA BENCH - SF-106

1 1/2" = 1'-0" P-ST-92

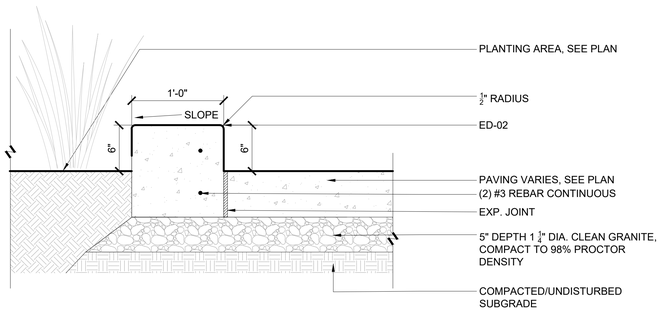

6 DETAIL - DECORATIVE CONCRETE CURB - ED-02

1 1/2" = 1'-0" P-ST-67

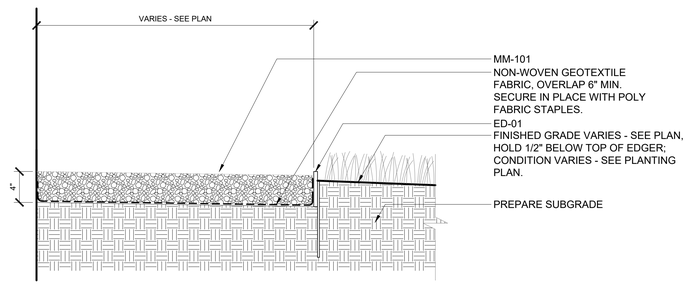

2 MAINTENANCE STRIP - MINERAL MULCH - MM-101

1 1/2" = 1'-0" P-ST-12

NOTE: ALL RELICS ARE INDIVIDUAL PIECES THAT MAY VARY IN SIZE AND SHAPE. CONTRACTOR TO MEASURE EACH RELIC AND PRODUCE SHOP DRAWINGS FOR EACH BASED ON THE DESIGN INTENT BELOW FOR APPROVAL BY LANDSCAPE ARCHITECT PRIOR TO FABRICATION.

CHILDREN RELICS SALVAGED FROM SITE

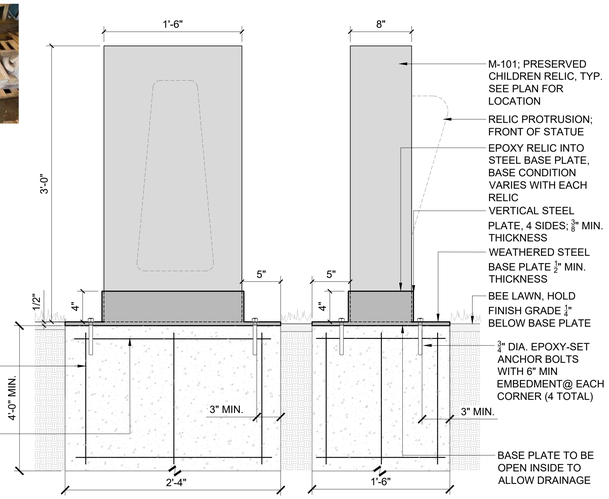

8 DETAIL - CHILDREN RELIC FEATURE - M-101

1 1/2" = 1'-0" P-ST-94

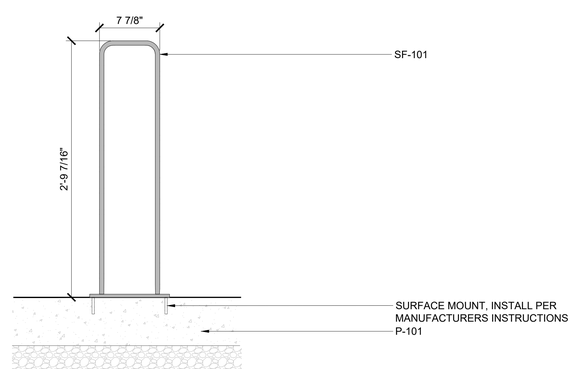

5 DETAIL - BICYCLE RACK - SF-101

1 1/2" = 1'-0" P-ST-10

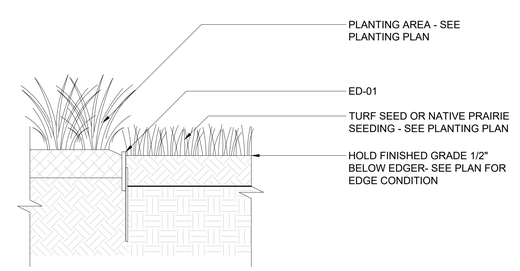

1 DETAIL - STEEL EDGER AT PLANTING BEDS - ED-01

1 1/2" = 1'-0"

WORKSHOP ARCHITECTS, INC

201 E PITTSBURGH AVE #301
MILWAUKEE WI 53204

WORKSHOP ARCHITECTS ARCHITECT
201 E PITTSBURGH AVENUE #301
MILWAUKEE, WI 53204

ROBERT E LEE & ASSOCIATES CIVIL
1250 CENTENNIAL CENTRE BLVD
HOBART, WI 54155

DAMON FARBER LANDSCAPE
25 WEST MAIN, SUITE 500
MADISON, WI 53703

SPIRE ENGINEERING STRUCTURAL
305 PLANKINGTON AVE, STE 101
MILWAUKEE, WI 53203

RING & DUCHATEAU MECHANICAL
17400 W CAPITOL DR
BROOKFIELD, WI 53045

RING & DUCHATEAU ELECTRICAL
17400 W CAPITOL DR
BROOKFIELD, WI 53045

RING & DUCHATEAU PLUMBING
17400 W CAPITOL DR
BROOKFIELD, WI 53045

RING & DUCHATEAU FIRE PROTECTION
17400 W CAPITOL DR
BROOKFIELD, WI 53045

St. Norbert College
Facilities and Campus Planning

Project Location:
290 REID STREET
DE PERE, WISCONSIN 54115

SCHOOL OF BUSINESS
ST. NORBERT COLLEGE
DE PERE, WISCONSIN 54115

Sheet Title:
SITE DETAILS

Revisions:

No.	Date:	By:	Description:

Graphic Scale	AS INDICATED
WSA Number	23-332
Volume Number	
Issued For	100% CDS, BID, & PERMIT
Date Issued	03/04/2024
Sheet Number	L500

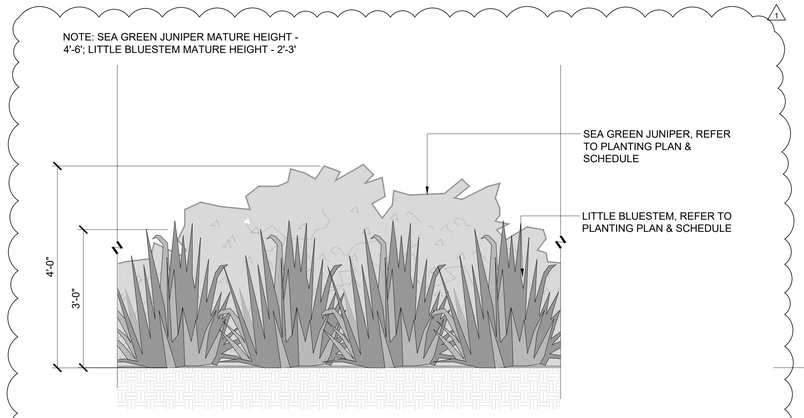

9 ELEVATION - PARKING LOT SCREENING
3/4" = 1'-0" P-ST-95

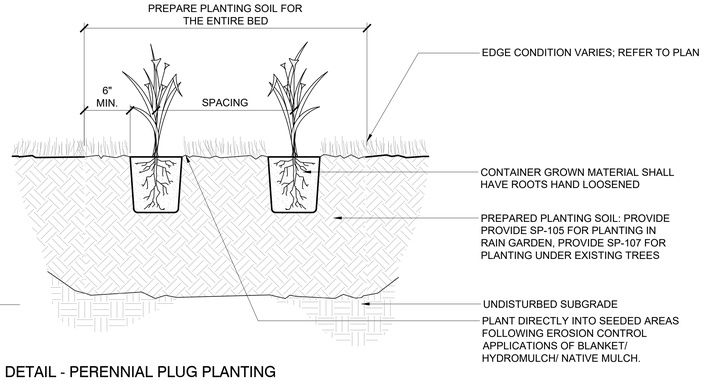

6 DETAIL - PERENNIAL PLUG PLANTING
1 1/2" = 1'-0" P-ST-13

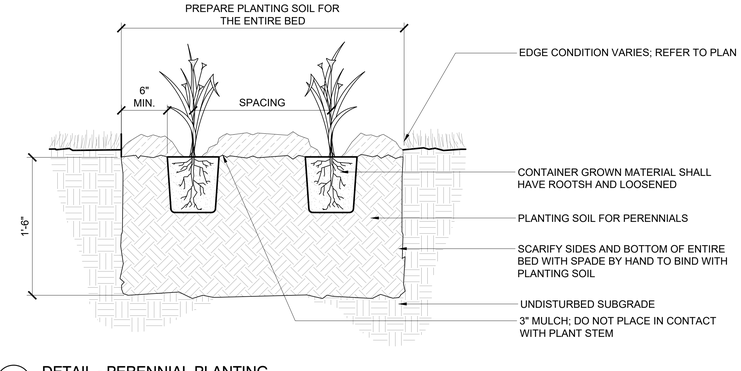

3 DETAIL - PERENNIAL PLANTING
1 1/2" = 1'-0" P-ST-04

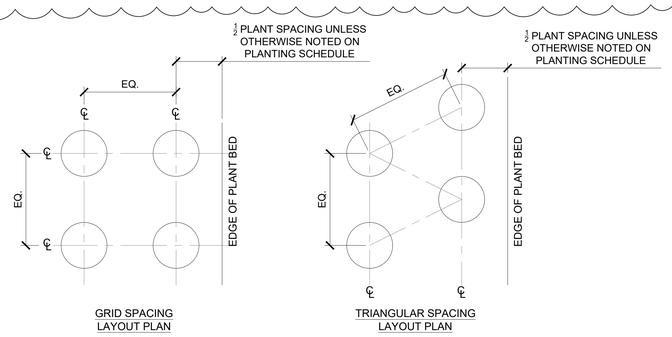

NOTE:
1. REFER TO PLANTING SCHEDULE FOR PLANT SPACING.
2. SEE SPECIFICATION SECTION 32-9300 "EXTERIOR PLANTS" FOR MORE INFORMATION.

8 DETAIL - PLANT SPACING
3/4" = 1'-0" P-ST-09

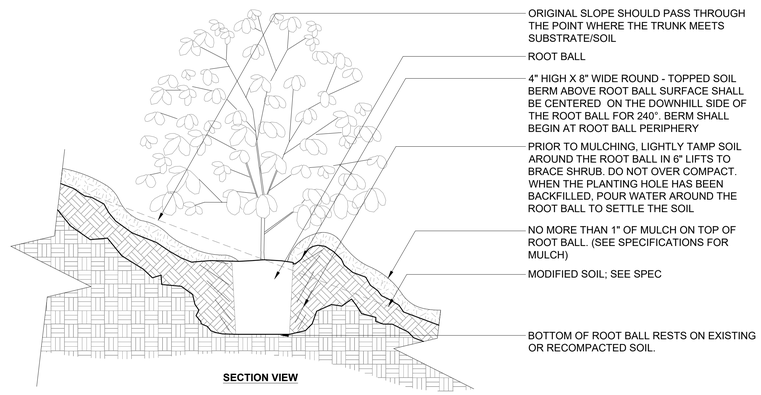

5 DETAIL - SHRUB AND PERENNIAL PLANTING ON SLOPE
1" = 1'-0" P-ST-91

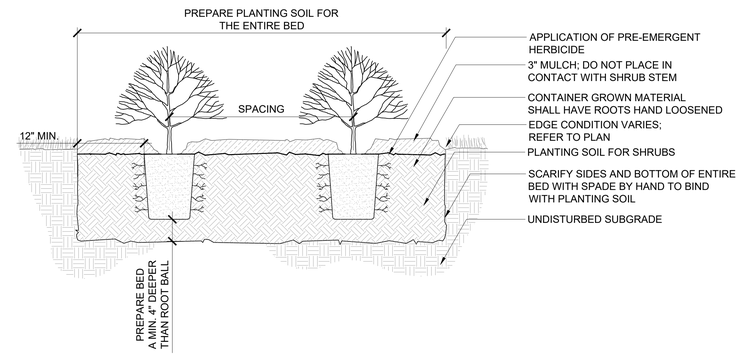

2 DETAIL - SHRUB PLANTING
1" = 1'-0" P-ST-07

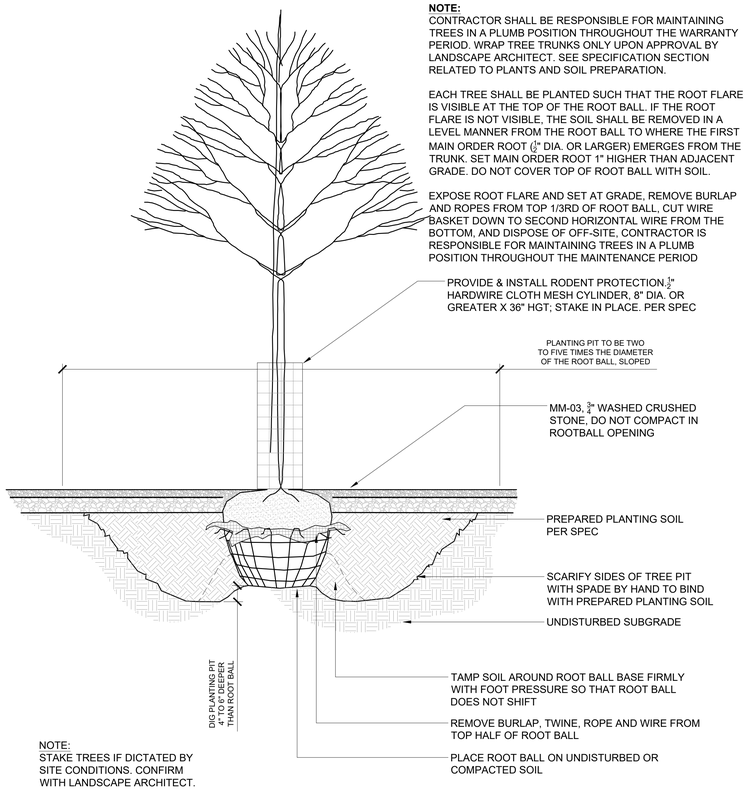

7 TREE PLANTING IN COMPACTED AGGREGATE
3/4" = 1'-0" P-ST-68

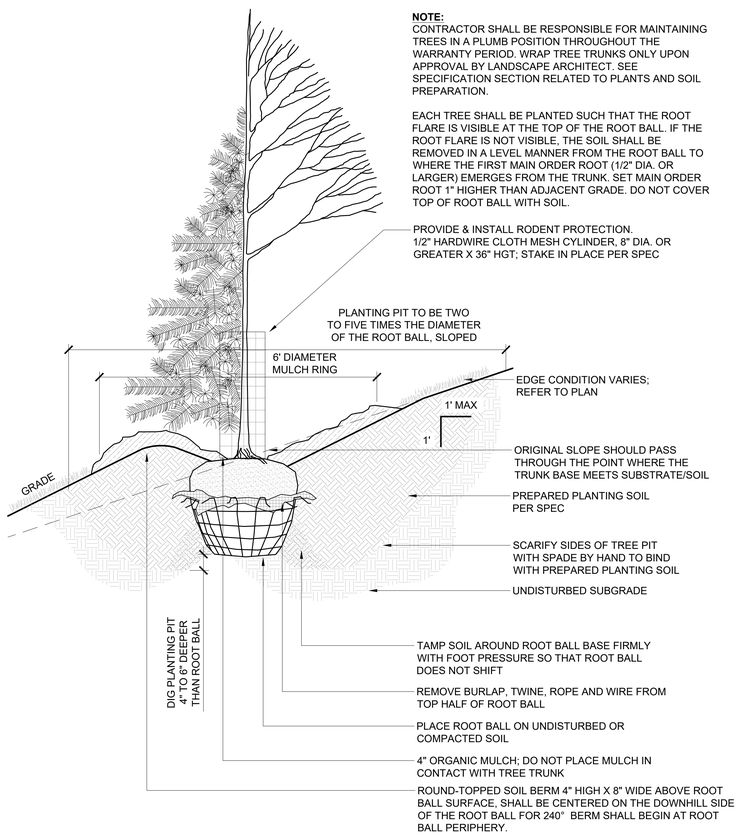

4 DETAIL - TREE PLANTING ON SLOPE 5% (20:1) TO 50% (2:1)
3/4" = 1'-0" P-ST-29

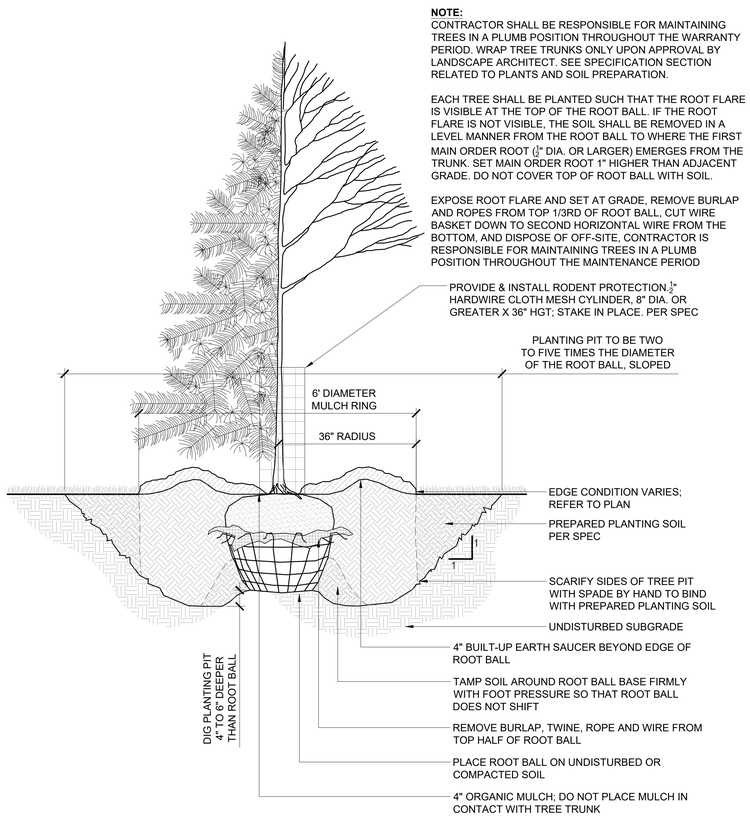

1 DETAIL - TREE PLANTING
3/4" = 1'-0" P-ST-08

WORKSHOP ARCHITECTS INC
201 E PITTSBURGH AVE #301
MILWAUKEE WI 53204

WORKSHOP ARCHITECTS ARCHITECT
201 E PITTSBURGH AVENUE #301
MILWAUKEE, WI 53204

ROBERT E LEE & ASSOCIATES CIVIL
1250 CENTENNIAL CENTRE BLVD
HOBART, WI 54155

DAMON FARBER LANDSCAPE
25 WEST MAIN, SUITE 500
MADISON, WI 53703

SPIRE ENGINEERING STRUCTURAL
305 PLANKINGTON AVE, STE 101
MILWAUKEE, WI 53203

RING & DUCHATEAU MECHANICAL
17400 W CAPITOL DR
BROOKFIELD, WI 53045

RING & DUCHATEAU ELECTRICAL
17400 W CAPITOL DR
BROOKFIELD, WI 53045

RING & DUCHATEAU PLUMBING
17400 W CAPITOL DR
BROOKFIELD, WI 53045

RING & DUCHATEAU FIRE PROTECTION
17400 W CAPITOL DR
BROOKFIELD, WI 53045

St. Norbert College
Facilities and Campus Planning

Project Location:
290 REID STREET
DE PERE, WISCONSIN 54115

SCHOOL OF BUSINESS
ST. NORBERT COLLEGE
DE PERE, WISCONSIN 54115

Sheet Title:
PLANTING DETAILS

Revisions:

No.	Date:	By:	Description:
1	03/01/2024		ADDENDUM 1

Graphic Scale	AS INDICATED
WSA Number	23-332
Volume Number	
Issued For	100% CDS, BID, & PERMIT
Date Issued	04/01/2024
Sheet Number	L600

SHEET NOTES -

1. THE RESULTS OF THIS STUDY ARE TO BE VIEWED ONLY AS AN INDICATION OF POSSIBLE PERFORMANCE, DUE TO VARIATIONS IN LED BOARDS, DRIVERS, MANUFACTURING, LINE VOLTAGE AND SITE CONDITIONS, A GUARANTEED LEVEL OF PERFORMANCE IS NOT POSSIBLE AND IS NOT REPRESENTED BY THE ANALYSIS.
2. ALL FIXTURES SHOWN ON SHEET E920 ARE INCLUDED IN SITE CALCULATIONS UNLESS OTHERWISE NOTED. REFER TO SHEET E903 FOR SITE POLE MOUNTING HEIGHT AND WALL MOUNTED FIXTURE HEIGHTS.
3. CALCULATION IS MODELED USING A LIGHT LOSS FACTOR OF 0.85 TO INDICATE MAINTAINED ILLUMINENCE.
4. ALL OUTDOOR LIGHTING COMPLIES WITH ZONING ORDINANCE 14-95 FOR LIGHT TRESPASS, DARK SKY COMPLIANCE, LIGHT COLORS, AND FIXTURE HEIGHTS.

'ETR' REFERENCES EXISTING POLES ALONG SIDEWALK. NEW TYPE 'P4' TO MATCH IN STYLE

Luminaire Schedule									
Symbol	Label	Description	Tag	LLF	Luminaire Lumens	Luminaire Watts	Total Watts	BUG Rating	Mounting Height
	d1f2301106-2a_aleds4typ80w_300	TYPE 4	P1	0.850	10172	81.1	486.6	B1-U0-G2	30
	E350LED-12L-40-T2-MDL006-FL	TYPE 2	P4	0.850	2047	19.8	99	B1-U0-G1	12
	77176_BEGA_IES (1)	TYPE 3	P2	0.850	3134	36	108	B1-U0-G1	14
	77175_BEGA_IES	TYPE 5	P3	0.850	3370	36	72	B2-U0-G1	12

Calculation Summary							
Label	CalcType	Units	Avg	Max	Min	Avg/Min	Max/Min
EAST SIDEWALK	Illuminance	Fc	0.95	2.4	0.2	4.75	12.00
PARKING LOT	Illuminance	Fc	1.31	2.7	0.3	4.37	9.00
PROPERTY LINE	Illuminance	Fc	0.11	0.4	0.0	N.A.	N.A.
SOUTH PUBLIC SIDEWALK	Illuminance	Fc	1.46	4.7	0.1	14.60	47.00
WEST ENTRY PLAZA	Illuminance	Fc	0.69	2.1	0.2	3.45	10.50

3/15/2024 11:38:06 AM

WORKSHOP ARCHITECTS INC
201 E PITTSBURGH AVE #301
MILWAUKEE WI 53204

WORKSHOP ARCHITECTS ARCHITECT
201 E PITTSBURGH AVENUE #301
MILWAUKEE, WI 53204

ROBERT E LEE & ASSOCIATES CIVIL
1250 CENTENNIAL CENTRE BLVD
HOBART, WI 54155

DAMON FARBER LANDSCAPE
310 S 4TH STREET, STE 7050
MINNEAPOLIS, MN 55415

SPIRE ENGINEERING STRUCTURAL
305 PLANKINGTON AVE, STE 101
MILWAUKEE, WI 53203

RING & DUCHATEAU MECHANICAL
17400 W CAPITOL DR
BROOKFIELD, WI 53045

RING & DUCHATEAU ELECTRICAL
17400 W CAPITOL DR
BROOKFIELD, WI 53045

RING & DUCHATEAU PLUMBING
17400 W CAPITOL DR
BROOKFIELD, WI 53045

RING & DUCHATEAU FIRE PROTECTION
17400 W CAPITOL DR
BROOKFIELD, WI 53045

St. Norbert College
Facilities and Campus Planning

Project Location:
290 REID STREET
DE PERE, WISCONSIN 54115

SCHOOL OF BUSINESS
ST. NORBERT COLLEGE
DE PERE, WISCONSIN 54115

Sheet Title:
SITE LIGHTING PHOTOMETRICS PLAN

Revisions:

No.	Date:	By:	Description:

Graphic Scale	AS INDICATED
WSA Number	23-332
Volume Number	
Issued For	100% CDS, BID, & PERMIT
Date Issued	03/04/2024
Sheet Number	E920

GENERAL NOTES & KEY - EXTERIOR ELEVATION

1. ELEVATION 100'-0" = ACTUAL ELEVATION 602'-6"

EQUIPMENT-MOUNTED MECHANICAL SCREEN

IGU-3 - LOW-E COATED, ULTRACLEAR INSULATING GLASS, BASIS OF DESIGN VITRO ACUITY WITH SOLARBAN 90

40% FRIT, SCREENPRINTED ON SURFACE NO. 3

IGU-2 - LOW-E COATED, ULTRACLEAR INSULATING GLASS, BASIS OF DESIGN VITRO ACUITY WITH SOLARBAN 90

2" SPACED BIRD FRIT, SCREENPRINTED ON SURFACE NO. 3

IGU-1 - LOW-E COATED, ULTRACLEAR INSULATING GLASS, BASIS OF DESIGN VITRO ACUITY WITH SOLARBAN 90

NO FRIT

MODULAR BRICK, BR-2, SEE SPEC

MODULAR BRICK, BR-1, SEE SPEC

STONE BASE ST-1, SEE SPEC

EXTERIOR GLAZING SYSTEM SCHEDULE

MARK	TYPE
CW1	EXTERIOR ALUMINUM CURTAIN WALL SYSTEM, BASIS OF DESIGN: KAWNEER 1600UT, 7.5" DEEP
CW2	EXTERIOR ALUMINUM STOREFRONT SYSTEM, BASIS OF DESIGN: KAWNEER 601UT, 6" DEEP
CW3	EXTERIOR ALUMINUM CURTAIN WALL SYSTEM, BASIS OF DESIGN: KAWNEER 1600UT, 10.5" DEEP
CW4	EXTERIOR ALUMINUM CURTAIN WALL SYSTEM, BASIS OF DESIGN: KAWNEER CLEARWALL, 7.5" DEEP
CW5	EXTERIOR ALUMINUM CURTAIN WALL SYSTEM, BASIS OF DESIGN: KAWNEER 1620UT, 6" DEEP

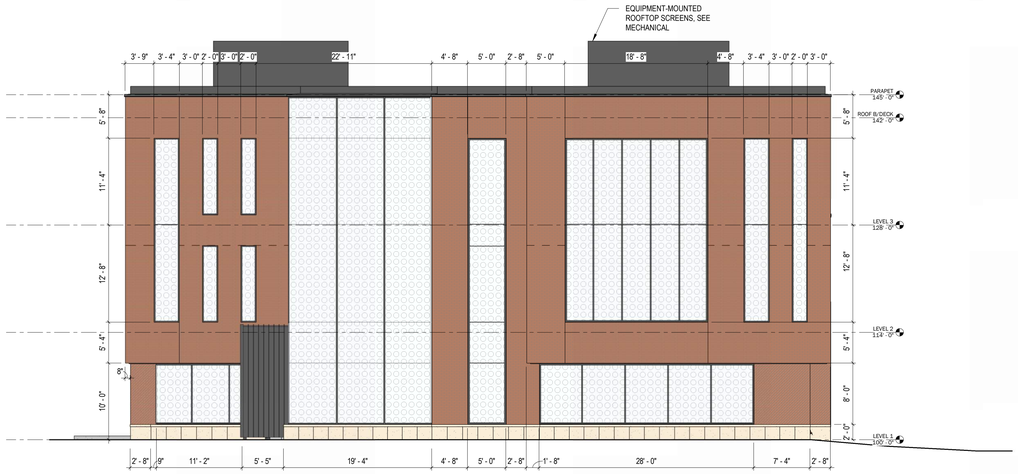

2 EXTERIOR ELEVATION - SOUTH
1/8" = 1'-0"

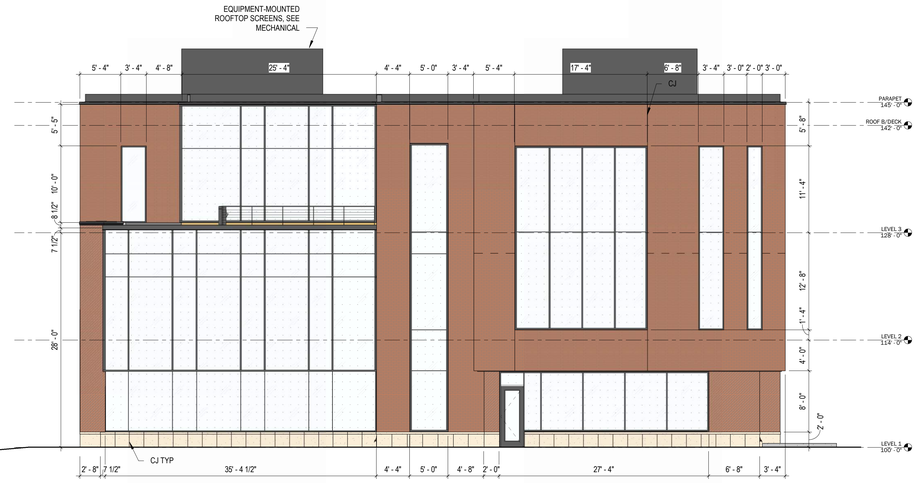

1 EXTERIOR ELEVATION - NORTH
1/8" = 1'-0"

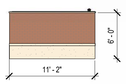

6 DUMPSTER ENCLOSURE WEST ELEVATION
1/8" = 1'-0"

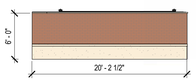

5 DUMPSTER ENCLOSURE NORTH ELEVATION
1/8" = 1'-0"

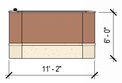

4 DUMPSTER ENCLOSURE EAST ELEVATION
1/8" = 1'-0"

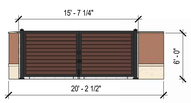

3 DUMPSTER ENCLOSURE SOUTH ELEVATION
1/8" = 1'-0"

3/28/2024 9:38:19 AM

WORKSHOP
WORKSHOP ARCHITECTS INC

201 E PITTSBURGH AVE #301
MILWAUKEE WI 53204

WORKSHOP ARCHITECTS ARCHITECT
201 E PITTSBURGH AVENUE #301
MILWAUKEE, WI 53204

ROBERT E LEE & ASSOCIATES CIVIL
1250 CENTENNIAL CENTRE BLVD
HOBART, WI 54155

DAMON FARBER LANDSCAPE
25 WEST MAIN, SUITE 500
MADISON, WI 53703

SPIRE ENGINEERING STRUCTURAL
305 PLANKINGTON AVE, STE 101
MILWAUKEE, WI 53203

RING & DUCHATEAU MECHANICAL
17400 W CAPITOL DR
BROOKFIELD, WI 53045

RING & DUCHATEAU ELECTRICAL
17400 W CAPITOL DR
BROOKFIELD, WI 53045

RING & DUCHATEAU PLUMBING
17400 W CAPITOL DR
BROOKFIELD, WI 53045

RING & DUCHATEAU FIRE PROTECTION
17400 W CAPITOL DR
BROOKFIELD, WI 53045

St. Norbert College
Facilities and Campus Planning

Project Location:
290 REID STREET
DE PERE, WISCONSIN 54115

SCHOOL OF BUSINESS
ST. NORBERT COLLEGE
DE PERE, WISCONSIN 54115

Sheet Title:
EXTERIOR ELEVATIONS

Revisions:

No.	Date:	By:	Description:

Graphic Scale	AS INDICATED
WSA Number	23-332
Volume Number	
Issued For	100% CDS, BID, & PERMIT
Date Issued	03/04/2024
Sheet Number	X202

GENERAL NOTES & KEY - EXTERIOR ELEVATION

1. ELEVATION 100'-0" = ACTUAL ELEVATION 602'-6"

EQUIPMENT-MOUNTED MECHANICAL SCREEN

IGU-3 - LOW-E COATED, ULTRACLEAR INSULATING GLASS, BASIS OF DESIGN VITRO ACUITY WITH SOLARBAN 90

40% FRIT, SCREENPRINTED ON SURFACE NO. 3

IGU-2 - LOW-E COATED, ULTRACLEAR INSULATING GLASS, BASIS OF DESIGN VITRO ACUITY WITH SOLARBAN 90

2" SPACED BIRD FRIT, SCREENPRINTED ON SURFACE NO. 3

IGU-1 - LOW-E COATED, ULTRACLEAR INSULATING GLASS, BASIS OF DESIGN VITRO ACUITY WITH SOLARBAN 90

NO FRIT

MODULAR BRICK, BR-2, SEE SPEC

MODULAR BRICK, BR-1, SEE SPEC

STONE BASE ST-1, SEE SPEC

EXTERIOR GLAZING SYSTEM SCHEDULE

MARK	TYPE
CW1	EXTERIOR ALUMINUM CURTAIN WALL SYSTEM, BASIS OF DESIGN: KAWNEER 1600UT, 7.5" DEEP
CW2	EXTERIOR ALUMINUM STOREFRONT SYSTEM, BASIS OF DESIGN: KAWNEER 601UT, 6" DEEP
CW3	EXTERIOR ALUMINUM CURTAIN WALL SYSTEM, BASIS OF DESIGN: KAWNEER 1600UT, 10.5" DEEP
CW4	EXTERIOR ALUMINUM CURTAIN WALL SYSTEM, BASIS OF DESIGN: KAWNEER CLEARWALL, 7.5" DEEP
CW5	EXTERIOR ALUMINUM CURTAIN WALL SYSTEM, BASIS OF DESIGN: KAWNEER 1620UT, 6" DEEP

2 EXTERIOR ELEVATION - EAST
1/8" = 1'-0"

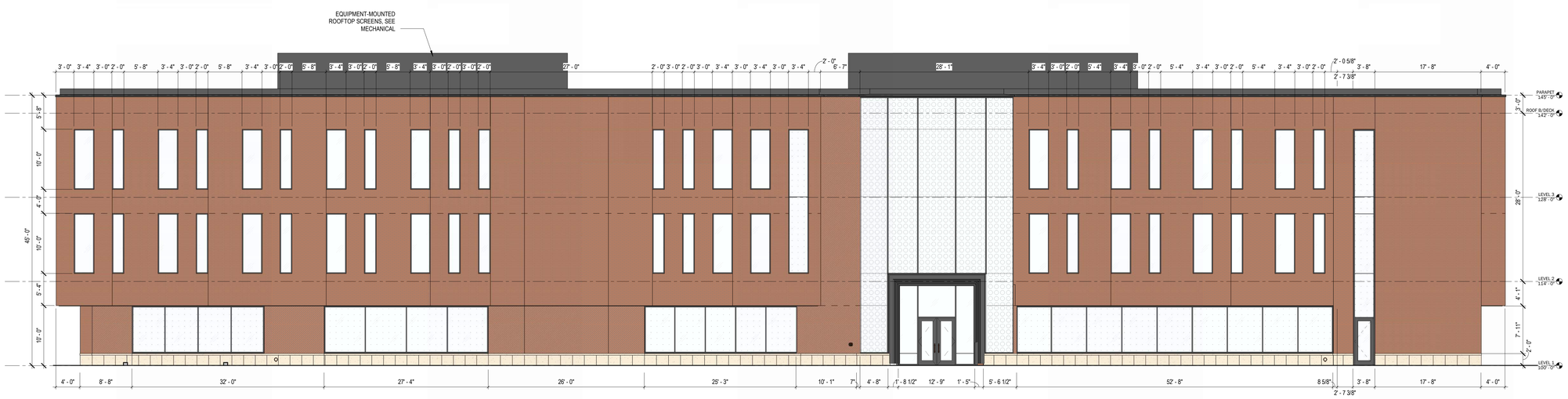

1 EXTERIOR ELEVATION - WEST
1/8" = 1'-0"

WORKSHOP
WORKSHOP ARCHITECTS INC

201 E PITTSBURGH AVE #301
MILWAUKEE WI 53204

WORKSHOP ARCHITECTS ARCHITECT
201 E PITTSBURGH AVENUE #301
MILWAUKEE, WI 53204

ROBERT E LEE & ASSOCIATES CIVIL
1250 CENTENNIAL CENTRE BLVD
HOBART, WI 54155

DAMON FARBER LANDSCAPE
25 WEST MAIN, SUITE 500
MADISON, WI 53703

SPIRE ENGINEERING STRUCTURAL
305 PLANKINGTON AVE, STE 101
MILWAUKEE, WI 53203

RING & DUCHATEAU MECHANICAL
17400 W CAPITOL DR
BROOKFIELD, WI 53045

RING & DUCHATEAU ELECTRICAL
17400 W CAPITOL DR
BROOKFIELD, WI 53045

RING & DUCHATEAU PLUMBING
17400 W CAPITOL DR
BROOKFIELD, WI 53045

RING & DUCHATEAU FIRE PROTECTION
17400 W CAPITOL DR
BROOKFIELD, WI 53045

St. Norbert College
Facilities and Campus Planning

Project Location:
290 REID STREET
DE PERE, WISCONSIN 54115

SCHOOL OF BUSINESS
ST. NORBERT COLLEGE
DE PERE, WISCONSIN 54115

Sheet Title:
EXTERIOR ELEVATIONS

Revisions:

No.	Date:	By:	Description:
1	04/01/2024		ADDENDUM 1

Graphic Scale	AS INDICATED
WSA Number	23-332
Volume Number	
Issued For	100% CDS, BID, & PERMIT
Date Issued	03/04/2024
Sheet Number	X203

3/28/2024 9:38:21 AM

Donald & Patricia Schneider Family Hall
St. Norbert College
St. Norbert College
WORKSHOP

ST. NORBERT
COLLEGE
WORKSHOP