Planning/Zoning Application

Planning & Zoning Department

Receipt # 188943

Submitted On:
Jan 18, 2024, 02:09PM EST

CITY OF DE PERE
RECEIVED
JAN 22 PAID
PLANNING DEPT.

Parcel Number: (Include ALL parcels)	WD-84-3
Nearest property address to the project site:	**Street Address:** 801 Main Avenue **City:** De Pere **State:** WI **Zip:** 54115
Check each project type that is being applied for:	Site Plan
Current De Pere Zoning Districts:	MX3
Existing Site Land Uses:	Commercial
Proposed Site Land Uses:	Commercial
Does the project comply with the Comprehensive Plan?	Yes
Has City Staff been contacted for a pre-consultation meeting?	Yes
Property Owner:	**First Name:** Caleb **Last Name:** Hayes
Is the property owner's address the same as the nearest property address?	No
Property Owner's Address:	**Street Address:** 1674 Eisenhower Road **City:** De Pere **State:** WI **Zip:** 54115
Property Owner's Phone Number:	920-309-1037
Property Owner's Email Address:	caleb@calebhayes.com
Is someone processing the project for the property owner as their authorized representative?	Yes
Authorized Representative's Name:	**First Name:** Brandon **Last Name:** Robaidek
Authorized Representative's Business Name:	Robert E. Lee and Associates, Inc.

Authorized Representative's Phone Number:	920-662-9641
Authorized Representative's Email Address:	brobaidek@releeinc.com
Please attach a PDF copy of the site plan.	6137005_CARIBOU 24X36 2024-01-18.pdf
Would you like a basic checklist of information to include in the site plan?	Yes
How do you plan on paying for your application?	Online with a credit card
Total Due:	$350.00
Signature Data	First Name: Brandon Last Name: Robaidek Email Address: brobaidek@releeinc.com Brandon Robaidek Signed at: January 18, 2024 2:08pm America/New_York
User's Session Information	IP Address: 24.106.22.82 Referrer URL:

CITY OF DE PERE

335 South Broadway, De Pere, WI 54115 | www.de-pere.org

March 7, 2024

Brandon Robaidek
Robert E. Lee and Associates, INC
1250 Centennial Centre BL
Hobart, WI 54155

RE: Site Plan Review for the New Caribou Coffee at 803 Main AV
Parcel WD-364-D-506

Dear Brandon:

Thank you for the site plan for the New Caribou Coffee at 803 Main AV. The City of De Pere staff reviewed the site plan on March 7, 2024, and recommended approval, with the following four conditions that must be addressed prior to submitting a request for occupancy permits:

- After landscaping is installed, provide a statement from the landscaper that verifies that all landscaping has been installed according to the approved landscaping plan to minimize delays or violations related to this topic.
- After the exterior lighting is installed, provide a statement from the installer that the light spill from the property does not exceed the approved photometric plan.
- Submit detailed plans of the building layout including kitchen equipment & finish schedules.
- Check if there is a model or traffic study that forecasts generated traffic for a typical Caribou Coffee. Public Works is looking for additional traffic information for the reconstruction of the Main AV and Eighth ST intersection by WisDOT in 2028.

You may now proceed to the Inspection Division to begin the process of obtaining permits. Should you have any questions regarding the decision or require further information, feel free to contact me at 339-4043 or pschleinz@deperewi.gov.

Sincerely,

Peter Schleinz
Senior Planner | Zoning Administrator

cc: Daniel J. Lindstrom, AICP, Development Services Director
Dennis Jensen, Senior Building Inspector

CARIBOU COFFEE DEVELOPMENT FOR
PARK PLACE HOLDINGS, LLC. - 801 MAIN AVE.
CITY OF DE PERE, BROWN COUNTY, WISCONSIN

ATTENTION!
DOWNLOADED PLANS ARE NOT SCALEABLE, NEITHER THE OWNER OR THE ENGINEER SHALL BE HELD RESPONSIBLE FOR THE SCALE OR PRINT QUALITY OF DOWNLOADED PLANS. ONLY PRINTED PLANS FROM BLUE PRINT SERVICE CO., INC. SHALL BE CONSIDERED TO BE SCALEABLE PLANS.

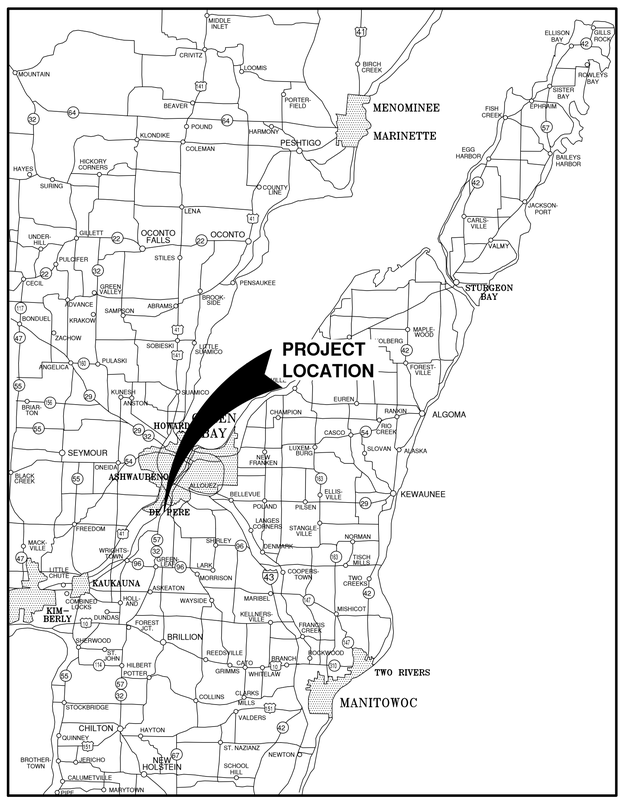

VICINITY MAP

NOTE:
EXISTING UTILITIES SHOWN ON PLANS ARE APPROXIMATE. THE CONTRACTOR SHALL BE RESPONSIBLE FOR OBTAINING EXACT LOCATIONS AND ELEVATIONS OF ALL UTILITIES, WHETHER SHOWN OR NOT, FROM THE OWNERS OF THE RESPECTIVE UTILITIES. ALL UTILITY OWNERS SHALL BE NOTIFIED FOR LOCATES BY THE CONTRACTOR 72 HOURS PRIOR TO EXCAVATION.

NOTE:
ALL EROSION CONTROL MEASURES SHALL BE IN PLACE PRIOR TO CONSTRUCTION AND SHALL CONFORM TO THE WISCONSIN DEPARTMENT OF NATURAL RESOURCES CONSTRUCTION SITE EROSION CONTROL AND TECHNICAL STANDARDS.

INDEX TO DRAWINGS

SHT. NO.	DESCRIPTION
C	LOCATION MAPS AND INDEX TO DRAWINGS
1	GENERAL NOTES
2	EXISTING CONDITIONS AND DEMO PLAN
3	OVERALL SITE PLAN
4	SITE AND UTILITY PLAN
5	GRADING AND EROSION CONTROL PLAN
6	MISCELLANEOUS DETAILS
7	MISCELLANEOUS DETAILS
8	EROSION CONTROL - INLET PROTECTION TYPES A, B, C AND D
9	EROSION CONTROL - INLET PROTECTION TYPE D-HR AND TYPE D-M
10	EROSION CONTROL - SHEET FLOW DETAILS
11	EROSION CONTROL - TRACKOUT CONTROL PRACTICES
L1	LANDSCAPE PLAN
L2	LANDSCAPE DETAIL
L3	LIGHTING PLAN

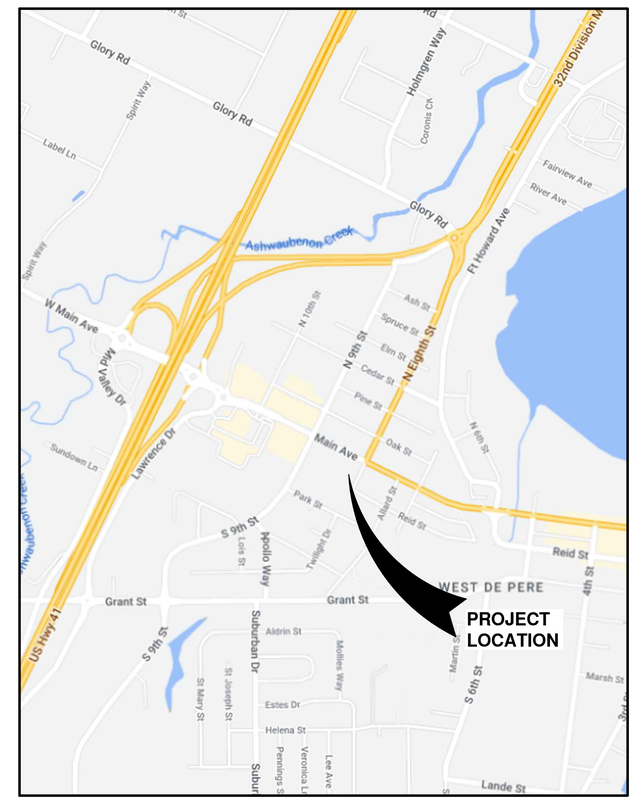

LOCATION MAP

NO.	DATE	APPROV.	REVISION	NO.	DATE	APPROV.	REVISION
1	1/18/24	BDR	CITY SUBMITTAL				

DRAWN BDR
CHECKED
DESIGNED BDR

CARIBOU COFFEE DEVELOPMENT FOR
PARK PLACE HOLDINGS, LLC. - 801 MAIN AVE.
CITY OF DE PERE
BROWN COUNTY, WISCONSIN

LOCATION MAPS AND INDEX TO DRAWINGS

DATE 07/2023
FILE 6137005C
JOB NO. 6137005

Robert E. Lee & Associates, Inc.
1250 Centennial Centre Blvd | Hobart, WI | 920-662-9641 | releeinc.com

SHEET NO. C

File: R:\6100\6137\6137005\dwg\6137005c.dwg
Plot Date: Feb 13, 2024 - 11:36am

UTILITY INFORMATION:

UTILITIES PRESENT:
CITY OF DE PERE STORM, SANITARY, AND WATER, EVERSTREAM TELECOMMUNICATIONS, AT&T TELECOMMUNICATIONS, TDS TELECOMMUNICATIONS, TIME WARNER CABLE TELECOMMUNICATIONS, LEVEL 3 NOW LUMEN, NOW CENTURY LINK TELECOMMUNICATIONS, AND WPS GAS AND ELECTRIC.

UTILITIES SHOWN ON THIS MAP ARE BASED ON LOCATES FROM:

DIGGER'S HOTLINE TICKET NUMBER 20232409346 6/23/2023, VISIBLE OBSERVATION (7/11/2023) AND RECORD UTILITY PLAN DOCUMENTS. UTILITY LINE LOCATIONS SHOULD BE VERIFIED PRIOR TO ANY DIGGING. THIS SITE MAY CONTAIN BURIED UTILITIES NOT IDENTIFIED ON THIS MAP.

DIGGERS HOTLINE = 1-800-242-8511

WATER/SANITARY/STORM SEWER:
DEPARTMENT OF PUBLIC WORKS
CITY OF DE PERE
925 SIXTH ST.
DE PERE, WI 54155

(920) 339-8076

TELECOMMUNICATIONS:
EVERSTREAM
1228 EUCLID AVENUE
CLEVELAND, OH 44115

(844) 387-7876

TELECOMMUNICATIONS:
AT & T / SBC
205 S. JEFFERSON ST.
GREEN BAY, WI 54301

(920) 433-4147

TELECOMMUNICATIONS:
TDS METROCOM / TDS TELECOM
1029 W. MASON ST.
GREEN BAY, WI 54303

(920)884-3340

TELECOMMUNICATIONS:
TIME WARNER CABLE
2580 W. MASON ST.
GREEN BAY, WI 54303

(920) 944-1581

GAS & ELECTRIC:
WISCONSIN PUBLIC SERVICE CORP.
700 N. ADAMS ST.
GREEN BAY, WI 54307

(800) 797-7434

DIGGERS HOTLINE
Dial 811 or (800) 242-8511
www.DiggersHotline.com

TO OBTAIN LOCATION OF PARTICIPANTS UNDERGROUND FACILITIES BEFORE YOU DIG IN WISCONSIN

WIS. STATUTE 182.0175 (1974) REQUIRES MIN. OF 3 WORK DAYS NOTICE BEFORE YOU EXCAVATE.

LEGEND

- FIRE HYDRANT
- WATER VALVE/CURB STOP
- WATER MANHOLE
- REDUCER/INCREASER
- SANITARY MANHOLE
- AIR RELIEF MANHOLE
- STORM MANHOLE
- OPEN STORM MANHOLE
- STORM INLET
- STORM INLET MANHOLE
- TANK COVER
- SOIL BORING
- POST
- IRON PIPE/ROD
- PK NAIL
- POWER POLE
- POWER POLE W/GUY WIRE
- LIGHT POLE
- TRAFFIC SIGNAL POLE
- ELECTRIC MANHOLE
- ELECTRIC METER
- TELEPHONE MANHOLE
- TELEPHONE PEDESTAL
- CABLE TV MANHOLE
- CABLE TV PEDESTAL
- GAS VALVE
- GAS METER
- MAILBOX
- SIGN
- BOLLARD
- DECIDUOUS TREE
- CONIFEROUS TREE
- BUSH
- RIP RAP
- CULVERT
- WETLANDS
- HANDICAP PARKING

- EDGE OF ASPHALT
- EDGE OF GRAVEL
- CURB & GUTTER
- TREE/BRUSH LINE
- CONTOUR LINE
- RETAINING WALL
- GUARD RAIL
- FENCE

- SANITARY SEWER (SIZE NOTED)
- FORCEMAIN (SIZE NOTED)
- STORM SEWER (SIZE NOTED)
- WATERMAIN (SIZE NOTED)
- GAS LINE
- OVERHEAD TELEPHONE LINE
- UNDERGROUND TELEPHONE LINE
- OVERHEAD ELECTRIC LINE
- UNDERGROUND ELECTRIC LINE
- OVERHEAD CABLE TV LINE
- CABLE TV LINE
- FIBER OPTIC LINE
- R/W LINE
- PROPERTY LINE
- EASEMENT LINE
- BUILDING SETBACK LINE
- SECTION LINE

GR.	GRAVEL	WM	WATERMAIN	VPC	VERTICAL POINT OF CURVATURE	B-B	BACK TO BACK (OF CURB)
BIT.	BITUMINOUS	HYD.	HYDRANT	VPI	VERTICAL POINT OF INTERSECTION	F-F	FACE TO FACE (OF CURB)
ASPH	ASPHALT	WV	WATER VALVE	VPT	VERTICAL POINT OF TANGENCY	R/W	RIGHT OF WAY
CONC	CONCRETE	SAN	SANITARY SEWER	PC	POINT OF CURVATURE	T/C	TOP OF CURB
SW	SIDEWALK	MH	MANHOLE	PI	POINT OF INTERSECTION	F/L	FLOW LINE
BLDG	BUILDING	ST	STORM SEWER	PT	POINT OF TANGENCY	C/L	CENTERLINE
HSE	HOUSE	CB	CATCH BASIN	R	RADIUS	R/L	REFERENCE LINE
PED	PEDESTAL	TELE	TELEPHONE	EX	EXISTING	INV	INVERT
PP	POWER POLE	ELEC	ELECTRIC	PR	PROPOSED	CMP	CORRUGATED METAL PIPE
LP	LIGHT POLE	TV	TELEVISION	EOR	END OF RADIUS	RCP	REINFORCED CONCRETE PIPE
BM	BENCH MARK	STA.	STATION	BOC	BACK OF CURB	CULV	CULVERT

OWNER INFORMATION:

PARK PLACE HOLDINGS, LLC
1674 EISENHOWER ROAD
DE PERE, WI 54115

(920) 309-1037

CONTACT: CALEB HAYES

File: R:\61100\61137\6137005\dwg\6137005c.dwg
Plot Rule: Fri Feb 16, 2024 - 11:41am
LAYOUT: GEN NOTES

NO.	DATE	APPROV.	REVISION	NO.	DATE	APPROV.	REVISION
1	1/18/24	BDR	CITY SUBMITTAL				

DRAWN BDR
CHECKED ---
DESIGNED BDR

CARIBOU COFFEE DEVELOPMENT FOR
PARK PLACE HOLDINGS, LLC. - 801 MAIN AVE.
CITY OF DE PERE
BROWN COUNTY, WISCONSIN

GENERAL NOTES

DATE 07/2023
FILE 6137005T
JOB NO. 6137005

Robert E. Lee & Associates, Inc.
1250 Centennial Centre Blvd | Hobart, WI | 920-662-9641 | releeinc.com

SHEET NO. 1

BENCHMARK	BENCHMARK ESTABLISHED BY: ROBERT E. LEE & ASSOCIATES, INC. **FIELD VERIFY BENCHMARKS FOR ACCURACY.**	
NO.	DESCRIPTION	EL.
1	TAG BOLT ON HYDRANT	EL. 612.39
2	NW BOLT ON CONCRETE LIGHT POLE	EL. 612.11
3	RAIL ROAD SPIKE ON POWER POLE 83 AA37	EL. 611.37

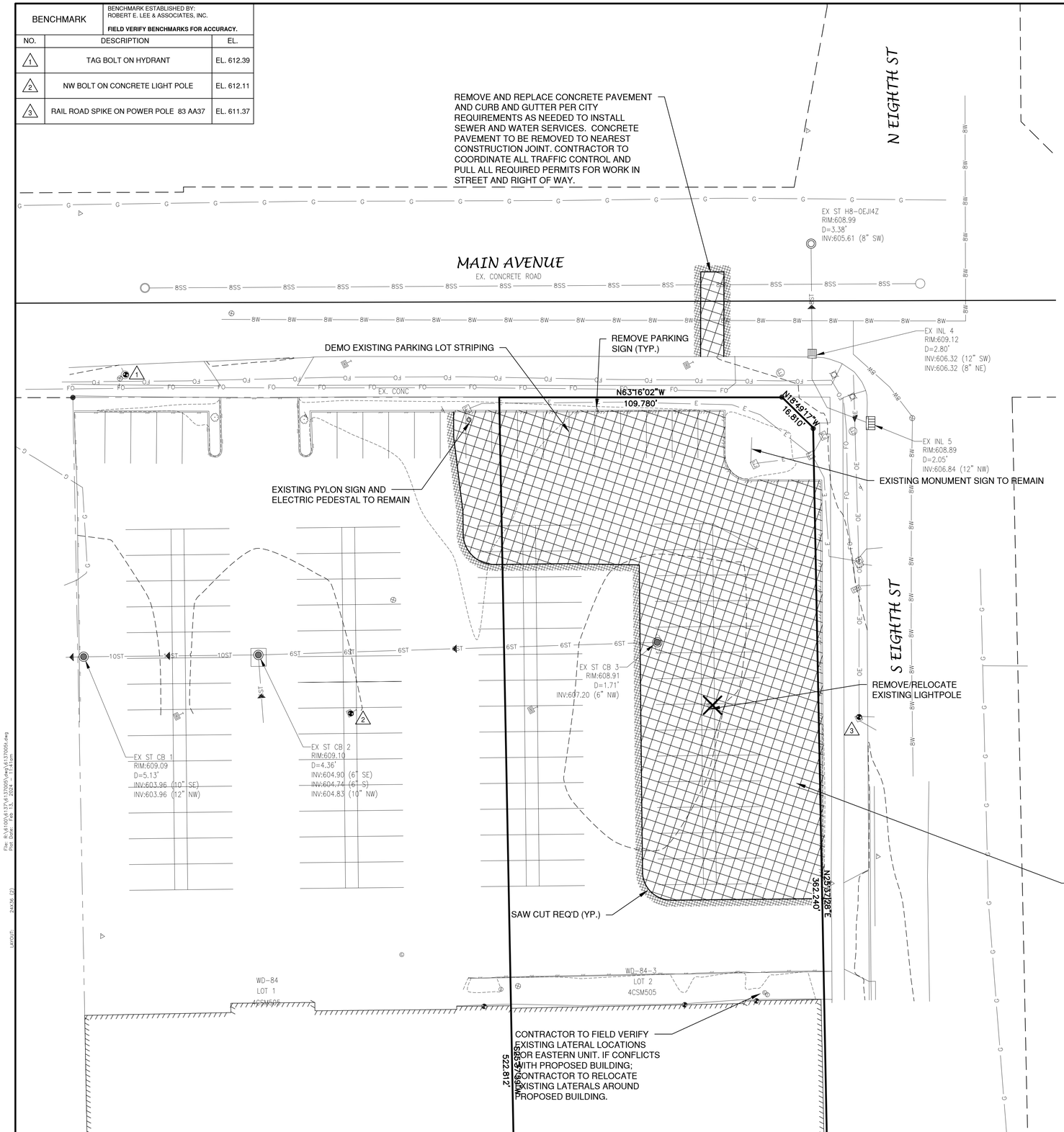

LEGEND

TO BE DEMOLISHED

TREE/SHRUB TO BE REMOVED

DEMOLITION NOTES

1. EXISTING ASPHALT AND BASE COURSE MAY BE PULVERIZED AND STOCKPILED ON SITE FOR FUTURE USE.
2. EXISTING GAS, ELECTRIC, CABLE TELEVISION AND TELEPHONE TO BE REMOVED AND/OR RELOCATED BY OTHERS. WORK SHALL BE COORDINATED BY GENERAL CONTRACTOR.
3. ALL MISCELLANEOUS STRUCTURES SHALL BE REMOVED.

File: R:\6160\6137\6137005\dwg\6137005.dwg
Plot Date: Feb 13, 2024 - 11:41am
LAYOUT: 24X36 (2)

NO.	DATE	APPROV.	REVISION	NO.	DATE	APPROV.	REVISION
1	1/18/24	BDR	CITY SUBMITTAL				

DRAWN BDR
CHECKED –
DESIGNED BDR

CARIBOU COFFEE DEVELOPMENT FOR
PARK PLACE HOLDINGS, LLC. - 801 MAIN AVE.
CITY OF DE PERE
BROWN COUNTY, WISCONSIN

EXISTING CONDITIONS AND DEMO PLAN

DATE 07/2023
FILE 6137005T
JOB NO. 6137005

Robert E. Lee & Associates, Inc.
1250 Centennial Centre Blvd | Hobart, WI | 920-662-9641 | releeinc.com

SHEET NO. 2

801-815 Main Ave, De Pere	801	Women's Care of Wisconsin, S.C. (medical office)	3,300 SF	8.25+6 for employee
801-815 Main Ave, De Pere	805	The Game Capital (retail)	10,800 SF	27
801-815 Main Ave, De Pere	807	Papa Johns Pizza (retail)	2,000 SF	5
801-815 Main Ave, De Pere	809	Holly Shepard (medical clinic)	2,000 SF	5+ 1 for employee
801-815 Main Ave, De Pere	811	Anytime Fitness (Retail)	5,000 SF	12.5
801-815 Main Ave, De Pere	813	The Wine Cellar (retail)	6,400 SF	16
801-815 Main Ave, De Pere	815	KK Sew & Vac (Retail)	2,560 SF	6.4
801-815 Main Ave, De Pere	120 S 8th	X Factor Elite Gym (Gym/retail)	9,000 SF	22.5
801-815 Main Ave, De Pere	Proposed	Caribou Coffee	583 SF	5 Guest stalls, 5 employee stalls, 2 Order Ahead Stalls
			Total	**124**

NOTE

ALL DISTURBED AREAS SHALL BE TOPSOILED TO A DEPTH OF 6 INCHES, SEEDED AND MULCHED. AREA TO BE RAKED FREE OF STONES AND CLUMPS.

PARCEL NO.

WD-84-3

ZONING

MX3 COMMERCIAL CORRIDOR

SITE DATA

TOTAL AREA = 1.56 ACRES, 67,887 S.F.

BUILDING AREA = 0.34 ACRES, 14,916 S.F. (22.0%)

SIDEWALK/PARKING LOT AREA = 0.77 ACRES, 33,429 S.F. (49.2%)

GREEN SPACE = 0.45 ACRES, 19,542 S.F. (28.8%)

PARKING DATA

TOTAL PARKING STALLS PROVIDED = 128

HANDICAP ACCESSIBLE PARKING STALLS = 7

TOTAL PARKING STALLS REQUIRED = 124

LEGEND

- ASPHALT PAVEMENT (6,886 S.F.)
- CONCRETE PAVEMENT
- GREEN SPACE
- PROPOSED 18" CURB AND GUTTER
- TRAFFIC FLOW ARROW
- (14) INDICATES NUMBER OF PARKING STALLS
- HANDICAPPED PARKING

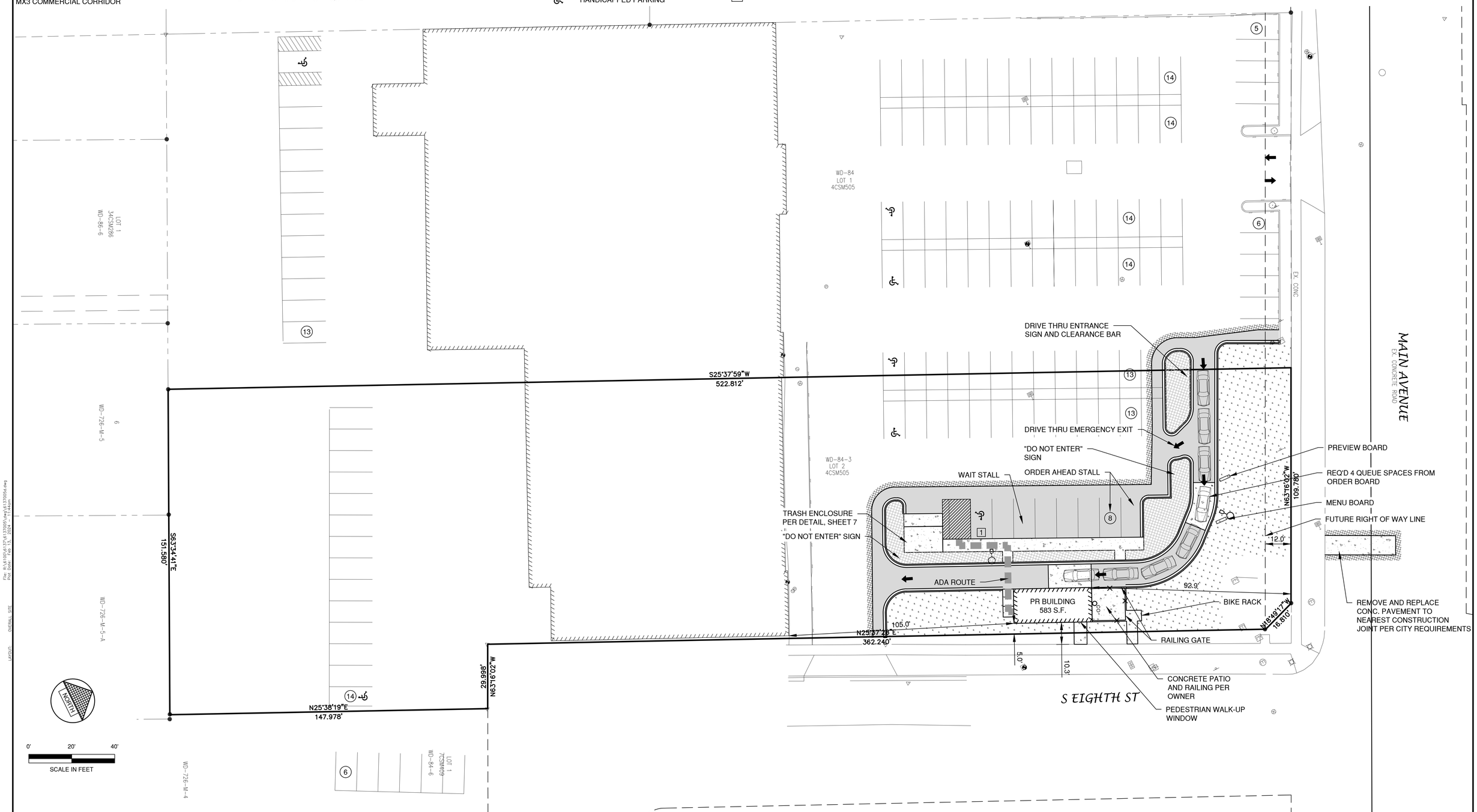

File: R:\6100\6137\6137005\dwg\6137005d.dwg Plot Date: Feb 15, 2024 - 11:44am

LAYOUT: OVERALL SITE

NO.	DATE	APPROV.	REVISION	NO.	DATE	APPROV.	REVISION
1	1/18/24	BDR	CITY SUBMITTAL				

DRAWN BDR
CHECKED ---
DESIGNED BDR

CARIBOU COFFEE DEVELOPMENT FOR
PARK PLACE HOLDINGS, LLC. - 801 MAIN AVE.
CITY OF DE PERE
BROWN COUNTY, WISCONSIN

OVERALL SITE PLAN

DATE 07/2023
FILE 6137005D
JOB NO. 6137005

Robert E. Lee & Associates, Inc.
1250 Centennial Centre Blvd | Hobart, WI | 920-662-9641 | releeinc.com

SHEET NO. 3

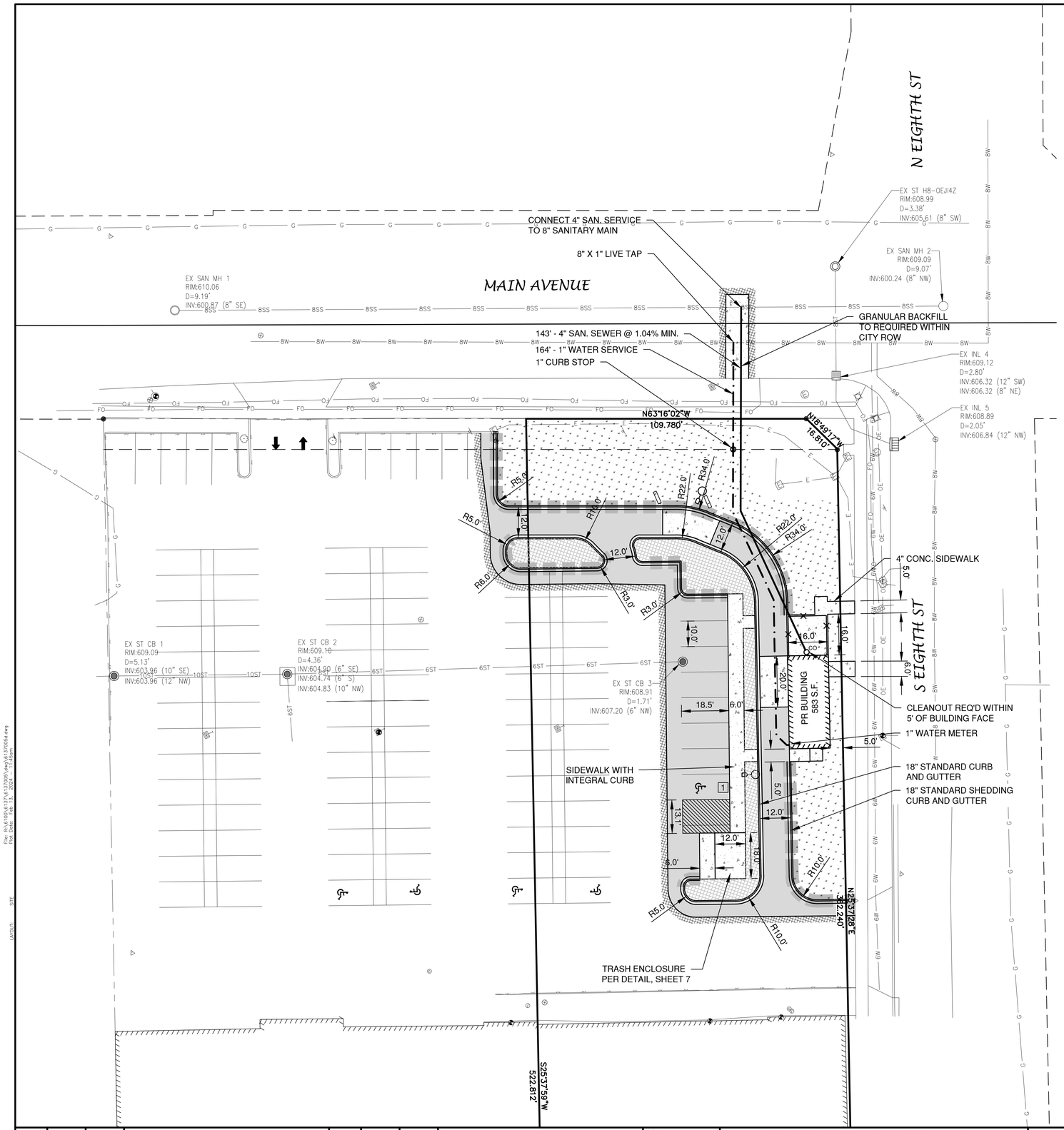

LEGEND

- CONCRETE PAVEMENT
- ASPHALT PAVEMENT (LIGHT) (6,886 S.F.)
- LANDSCAPE AREA
- GREEN SPACE
- PROPOSED 18" STANDARD CURB AND GUTTER
- PROPOSED 18" STANDARD SHEDDING CURB AND GUTTER
- HANDICAPPED PARKING
- WALL PACK
- LIGHT POLE (1 LAMP)
- LIGHT POLE (2 LAMPS)
- LIGHT POLE (3 LAMPS)
- LIGHT POLE (4 LAMPS)

*NOTE: ALL DIMENSIONS ARE TO THE FACE OF CURB, UNLESS NOTED OTHERWISE

LEGEND

- PROPOSED SANITARY SEWER
- 8SS — 8SS — EXISTING SANITARY SEWER (SIZE NOTED)
- PROPOSED STORM SEWER
- 10ST — 10ST — EXISTING STORM SEWER (SIZE NOTED)
- PROPOSED WATERMAIN
- 6W — 6W — 6W — EXISTING WATERMAIN (SIZE NOTED)

PROPOSED	EXISTING	
		FIRE HYDRANT
		WATER VALVE/CURB STOP
		WATER MANHOLE
		REDUCER/INCREASER
		SANITARY MANHOLE
		LIFT STATION
		TRACER WIRE SIGNAL CONNECTION BOX
		CLEANOUT
		STORM MANHOLE
		STORM CATCH BASIN
		STORM INLET
		STORM INLET MANHOLE
		YARD DRAIN
		STANDPIPE
		ROOF DOWNSPOUT
		DISCHARGE STRUCTURE

NOTE

1. FOUNDATION FOR MENU BOARD, PREVIEW BOARD AND CLEARANCE BAR TO BE CONSTRUCTED PER OWNER REQUIREMENTS.
2. PAVEMENT PARKING STALL MARKINGS TO BE 4 INCH STRIPES AND ONE WAY ARROWS TO BE PAINTED WHERE SHOWN.
3. A MINIMUM OF 6.5 FEET OF COVER SHALL BE MAINTAINED OVER ALL WATERMAIN.
4. SANITARY SEWER, WATERMAIN AND STORM SEWER SHALL BE CONSTRUCTED IN ACCORDANCE WITH THE CURRENT STANDARD SPECIFICATIONS FOR SEWER AND WATER CONSTRUCTION IN WISCONSIN AND ADMINISTRATIVE CODE CHAPTERS SPS 381-387.
5. FIELD VERIFY LOCATION OF EXISTING UTILITIES. IF EXISTING LOCATIONS DIFFER FROM WHAT IS INDICATED ON THE PLANS, **CONTACT ENGINEER,** PRIOR TO CONTINUED WORK.
6. ALL SANITARY SEWER, STORM SEWER AND WATER SERVICES / MAINS SHALL BE PROVIDED WITH TRACER WIRE OR OTHER METHOD TO BE LOCATED.
7. EXISTING GAS, ELECTRIC, CABLE TELEVISION AND TELEPHONE TO BE REMOVED AND/OR RELOCATED BY OTHERS. WORK SHALL BE COORDINATED BY GENERAL CONTRACTOR.
8. WORK IN RIGHT OF WAY WILL REQUIRE A CITY OF DE PERE EXCAVATION PERMIT, CITY OF DE PERE LANE CLOSURE PERMIT AND TRAFFIC CONTROL PLAN, AND A WISDOT LAND CLOSURE PERMIT AND TRAFFIC CONTROL PLAN. CONTRACTOR TO PULL ALL PERMITS NECESSARY FOR WORK IN RIGHT OF WAY.
9. COORDINATE INSPECTION FOR WATER TAP WITH THE CITY OF DE PERE WATER DEPARTMENT AT 920-339-4061.

NORTH

0' 20' 40'

SCALE IN FEET

File: R:\6100\6137\6137005\dwg\6137005d.dwg
Plot Date: Feb 15, 2024 - 11:42am
LAYOUT: SITE

NO.	DATE	APPROV.	REVISION	NO.	DATE	APPROV.	REVISION
1	1/18/24	BDR	CITY SUBMITTAL				

DRAWN BDR
CHECKED --
DESIGNED BDR

CARIBOU COFFEE DEVELOPMENT FOR
PARK PLACE HOLDINGS, LLC. - 801 MAIN AVE.
CITY OF DE PERE
BROWN COUNTY, WISCONSIN

SITE AND UTILITY PLAN

DATE 07/2023
FILE 6137005D
JOB NO. 6137005

Robert E. Lee & Associates, Inc.
1250 Centennial Centre Blvd | Hobart, WI | 920-662-9641 | releeinc.com

SHEET NO. 4

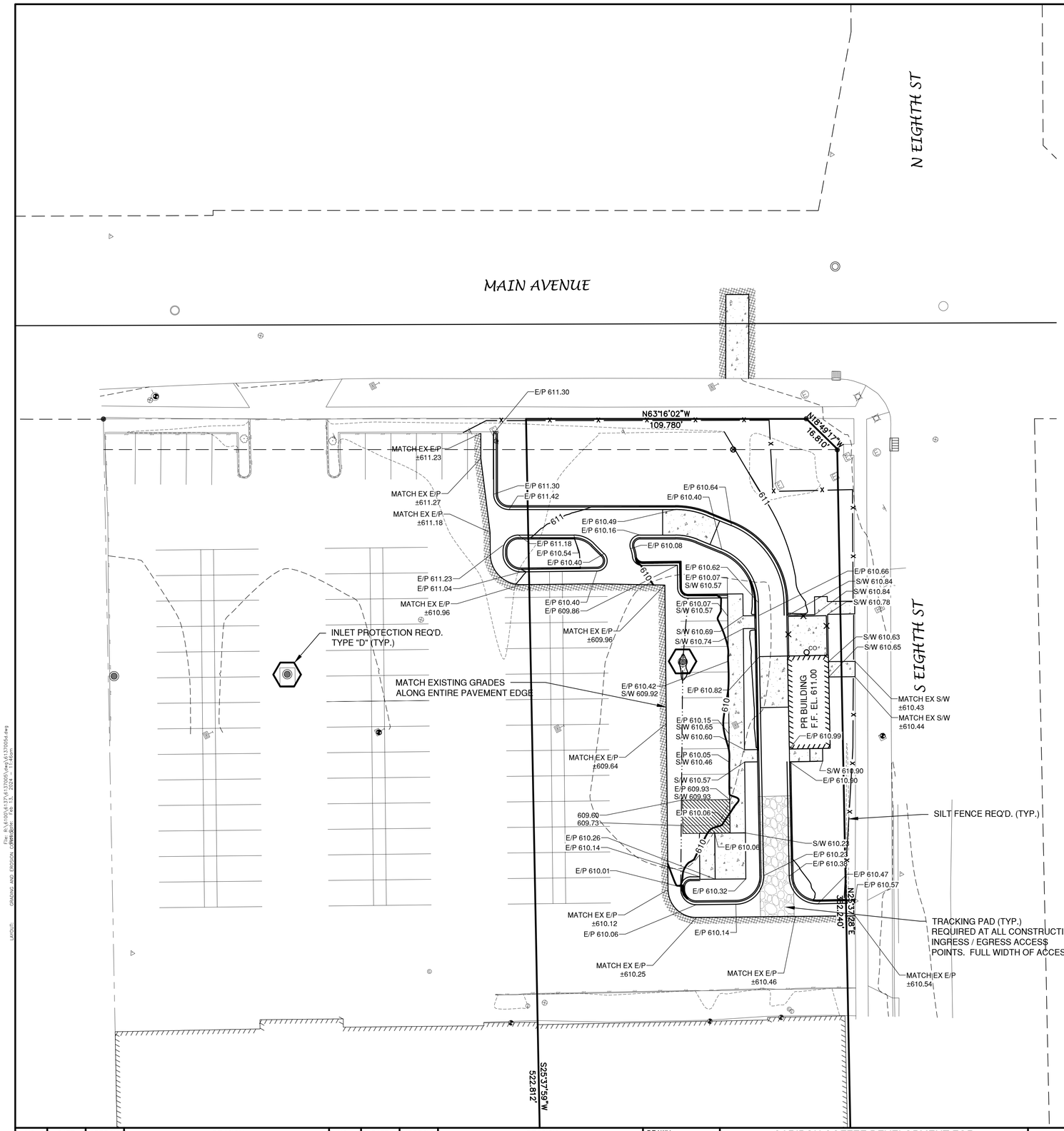

LEGEND

T/C 999.99	TOP OF CURB ELEVATION
F/L 888.88	FLOW LINE ELEVATION
S/W 666.66	TOP OF SIDEWALK ELEVATION
E/P 555.55	EDGE OF PAVEMENT ELEVATION
R/W 444.44	TOP OF RETAINING WALL ELEVATION
333.33	GROUND ELEVATION
	DRAINAGE SWALE
	DRAINAGE DIVIDE
	FLOW ARROW
	SAND BAGS (PER WDNR TECHNICAL STANDARD 1056)
	DITCH CHECK (PER WDNR TECHNICAL STANDARD 1062)
	TRACKING PAD (PER WDNR TECHNICAL STANDARD 1057)
	EROSION MAT (PER WDNR TECHNICAL STANDARD 1053)
	INLET PROTECTION (PER WDNR TECHNICAL STANDARD 1060)

EROSION CONTROL

ALL EROSION CONTROL PRACTICES INDICATED ON THIS PLAN ARE APPROXIMATE LOCATIONS ONLY. THE ACTUAL SITE MAY REQUIRE MORE OR LESS EROSION CONTROL DEPENDING ON THE CURRENT CONDITION OF THE SITE.

1. SILT FENCE IS REQUIRED DOWNSLOPE OF ANY DISTURBED LAND THAT MAY CARRY SEDIMENTS OFF SITE.
2. A TRACKING PAD IS REQUIRED AT ANY INGRESS/EGRESS LOCATION, WHERE SEDIMENT MAY BE TRACKED OFF-SITE.
3. PROPER INLET PROTECTION SHALL BE USED DEPENDING ON THE INLET TYPE.
4. ALL NECESSARY SITE DEWATERING SHALL BE PERFORMED IN ACCORDANCE WITH WDNR TECHNICAL STANDARD 1061.

File: R:\6100\6137\6137005\dwg\6137005d.dwg
LAYOUT: GRADING AND EROSION CONTROL Date/Time: Feb 13, 2024 - 11:40am

NO.	DATE	APPROV.	REVISION	NO.	DATE	APPROV.	REVISION
1	1/18/24	BDR	CITY SUBMITTAL				

DRAWN BDR
CHECKED
DESIGNED BDR

CARIBOU COFFEE DEVELOPMENT FOR
PARK PLACE HOLDINGS, LLC. - 801 MAIN AVE.
CITY OF DE PERE
BROWN COUNTY, WISCONSIN

GRADING AND EROSION CONTROL PLAN

DATE 07/2023
FILE 6137005D
JOB NO. 6137005

Robert E. Lee & Associates, Inc.
1250 Centennial Centre Blvd | Hobart, WI | 920-662-9641 | releeinc.com

SHEET NO. 5

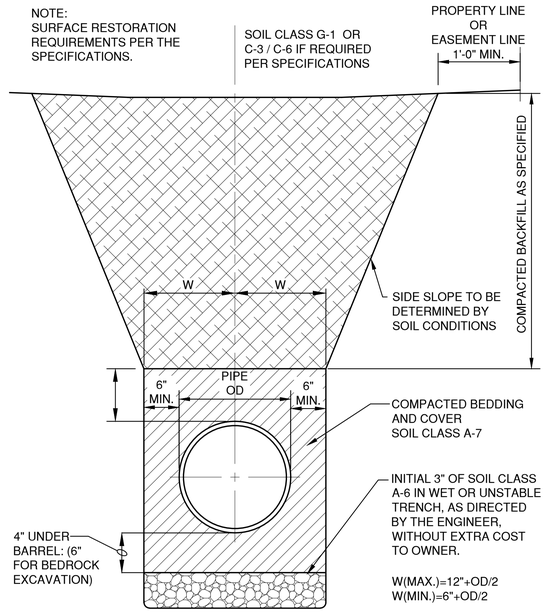

HDPE /PVC SEWER, WATERMAIN AND FORCEMAIN BEDDING AND TRENCH DETAIL

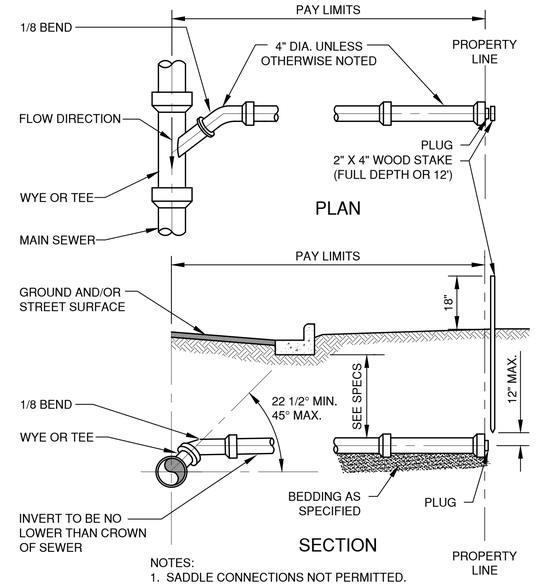

NOTES:
1. SADDLE CONNECTIONS NOT PERMITTED.
2. BACKFILL TO CONFORM TO MAIN SEWER.
3. MINIMUM SLOPE: 1/8 INCH PER FOOT.
4. MAXIMUM SLOPE: 1/2 INCH PER FOOT.

STANDARD SERVICE LATERAL

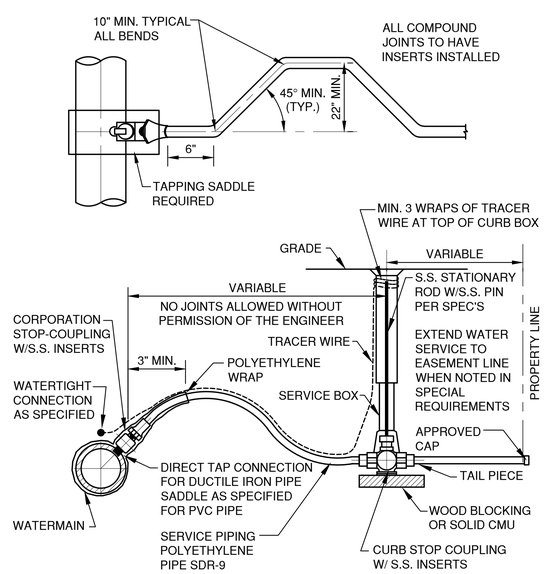

SERVICE PIPE	CORP. STOP	CURB STOP	SERVICE BOX
1"	1"	1"	2-1/2"
1-1/2"	1-1/2"	1-1/2"	3"
2"	2"	2"	3"

FOR A 2" SERVICE TAP ON 6" D.I. WATERMAIN, A SADDLE IS REQUIRED.

TAP SERVICE PIPING (POLYETHYLENE)

NOTE
CLEANOUT LINE TO BE THE SAME SIZE AND MATERIAL AS SEWER MAIN.

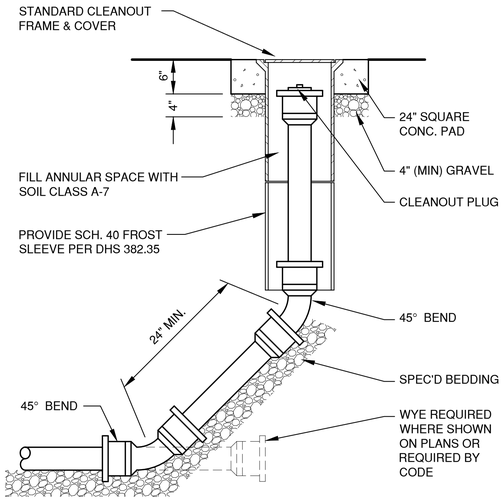

CLEAN-OUT DETAIL (TRAVELED AREAS)

NO.	DATE	APPROV.	REVISION	NO.	DATE	APPROV.	REVISION
1	1/18/24	BDR	CITY SUBMITTAL				

DRAWN BDR
CHECKED ---
DESIGNED BDR

CARIBOU COFFEE DEVELOPMENT FOR
PARK PLACE HOLDINGS, LLC. - 801 MAIN AVE.
CITY OF DE PERE
BROWN COUNTY, WISCONSIN

MISCELLANEOUS DETAILS

DATE 01/2024
FILE 6137005DET
JOB NO. 6137005

Robert E. Lee & Associates, Inc.
1250 Centennial Centre Blvd | Hobart, WI | 920-662-9641 | releeinc.com

SHEET NO. 6

File: R:\6100\6137\6137005\dwg\6137005DET.dwg
Plot Date: Feb 13, 2024 - 11:25am
LAYOUT: DETAILS (1)

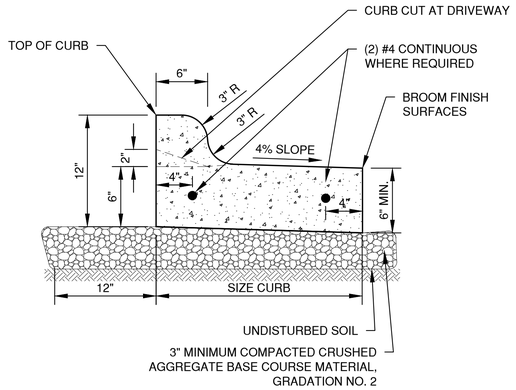

NOTES:
1. PROVIDE 1" EXPANSION JOINTS AT 300' INTERVALS OR AS SPECIFIED. PROVIDE CONTRACTION JOINTS EVERY 30' OR AS DIRECTED.

2. **AT REMOVAL AND REPLACEMENT AREAS** AND AT TIE-INS TO EXISTING CURB AND GUTTER, PROVIDE (2) #4 BARS, 18" LONG. DRILL AND GROUT INTO EXISTING CURB AND GUTTER 9". MATCH EXISTING SLOPE OF EXISTING GUTTER PAN.

SHEDDING CURB AND GUTTER

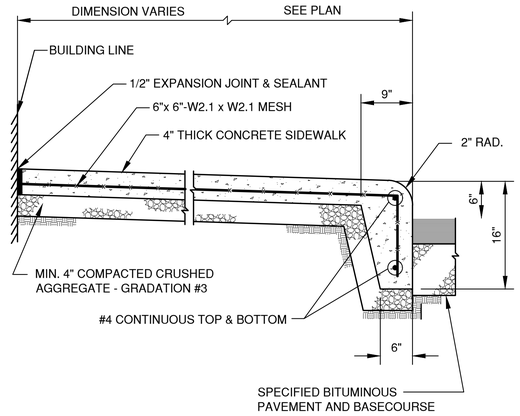

SIDEWALK WITH INTEGRAL CURB

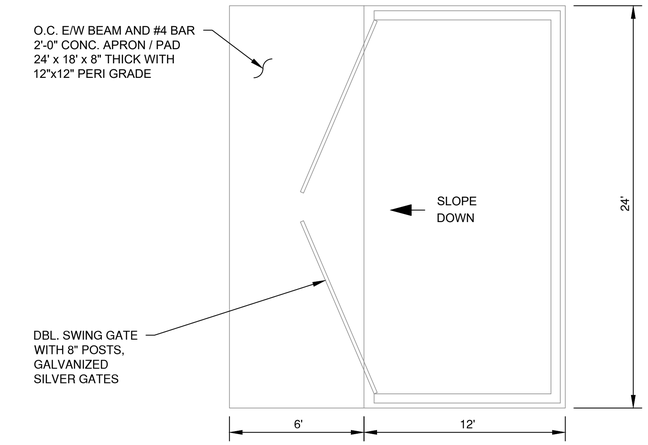

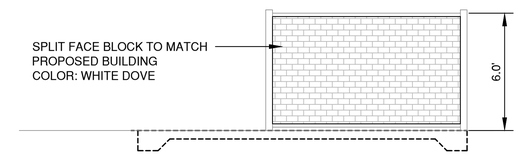

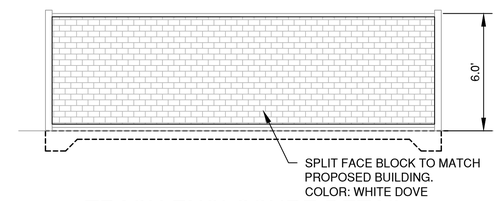

TRASH ENCLOSURE DETAIL
*DETAILED CONSTRUCTION DETAILS PER GENERAL CONTRACTOR

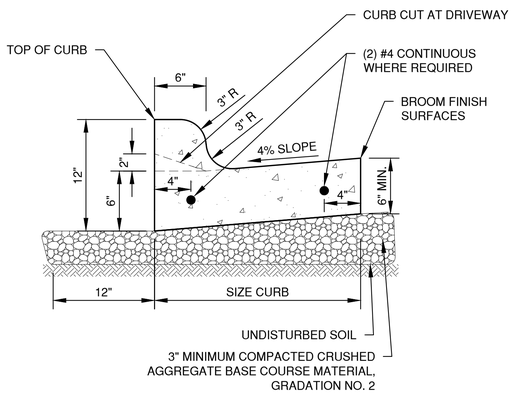

NOTES:
1. PROVIDE 1" EXPANSION JOINTS AT 300' INTERVALS OR AS SPECIFIED. PROVIDE CONTRACTION JOINTS EVERY 30' OR AS DIRECTED.

2. **AT REMOVAL AND REPLACEMENT AREAS** AND AT TIE-INS TO EXISTING CURB AND GUTTER, PROVIDE (2) #4 BARS, 18" LONG. DRILL AND GROUT INTO EXISTING CURB AND GUTTER 9". MATCH EXISTING SLOPE OF EXISTING GUTTER PAN.

STANDARD CURB AND GUTTER

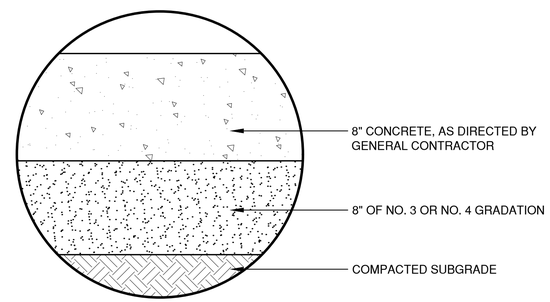

CONCRETE PAVEMENT

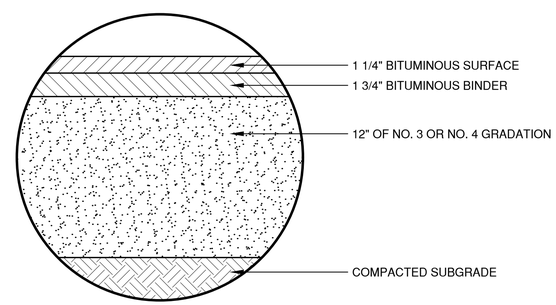

LIGHT DUTY ASPHALT PAVEMENT

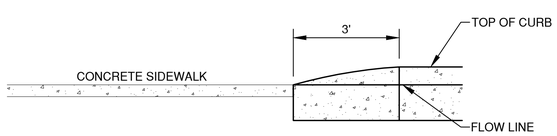

CURB TAPER DETAIL

NO.	DATE	APPROV.	REVISION	NO.	DATE	APPROV.	REVISION
1	1/18/24	BDR	CITY SUBMITTAL				

DRAWN BDR
CHECKED ---
DESIGNED BDR

CARIBOU COFFEE DEVELOPMENT FOR
PARK PLACE HOLDINGS, LLC. - 801 MAIN AVE.
CITY OF DE PERE
BROWN COUNTY, WISCONSIN

MISCELLANEOUS DETAILS

DATE 01/2024
FILE 6137005DET
JOB NO. 6137005

Robert E. Lee & Associates, Inc.
1250 Centennial Centre Blvd | Hobart, WI | 920-662-9641 | releeinc.com

SHEET NO. 7

File: R:\6100\6137\6137005\dwg\6137005DET.dwg
Plot Date: Mar 06, 2024 - 7:39am
LAYOUT: DETAILS (2)

INLET PROTECTION NOTES:

INLET PROTECTION DEVICES SHALL BE IN ACCORDANCE WITH WDNR TECHNICAL STANDARD 1060, STORM DRAIN INLET PROTECTION FOR CONSTRUCTION SITES.

MANUFACTURED ALTERNATIVES APPROVED AND LISTED ON THE WDOT PRODUCT ACCEPTABILITY LIST MAY BE SUBSTITUTED.

WHEN REMOVING OR MAINTAINING INLET PROTECTION, CARE SHALL BE TAKEN SO THAT THE SEDIMENT TRAPPED ON THE GEOTEXTILE FABRIC DOES NOT FALL INTO THE INLET. ANY MATERIAL FALLING INTO THE INLET SHALL BE REMOVED IMMEDIATELY.

MAINTENANCE NOTES:

WHEN REMOVING OR MAINTAINING INLET PROTECTION, CARE SHALL BE TAKEN SO THAT THE SEDIMENT TRAPPED IN THE FABRIC DOES NOT FALL INTO THE STRUCTURE. MATERIAL THAT HAS FALLEN INTO THE INLET SHALL BE IMMEDIATELY REMOVED.

INSTALLATION NOTES: TYPE "B" AND "C"

TRIM EXCESS FABRIC IN THE FLOW LINE TO WITHIN 3" OF THE GRATE.

DEMONSTRATE A METHOD OF MAINTENANCE, USING A SEWN FLAP, HAND HOLDS OR OTHER METHOD TO PREVENT ACCUMULATED SEDIMENT FROM ENTERING THE INLET.

TYPE "D"

DO NOT INSTALL INLET PROTECTION TYPE D IN INLETS SHALLOWER THAN 30" MEASURED FROM THE BOTTOM OF THE INLET TO THE TOP OF THE GRATE.

TRIM EXCESS FABRIC IN THE FLOW LINE TO WITHIN 3" OF THE GRATE.

THE INSTALLED BAG SHALL HAVE A MINIMUM SIDE CLEARANCE, BETWEEN THE INLET WALLS AND THE BAG, MEASURED AT THE BOTTOM OF THE OVERFLOW HOLES, OF 3". WHERE NECESSARY, CINCH THE BAG, USING PLASTIC ZIP TIES, TO ACHIEVE THE 3" CLEARANCE, THE TIES SHALL BE PLACED AT THE MAXIMUM OF 4" FROM THE BOTTOM OF THE BAG.

NOTES:

1. TAPER BOTTOM OF BAG TO MAINTAIN THREE INCHES OF CLEARANCE BETWEEN THE BAG AND THE STRUCTURE, MEASURED FROM THE BOTTOM OF THE OVERFLOW OPENINGS TO THE STRUCTURE WALL.
2. GEOTEXTILE FABRIC TYPE FF FOR FLAPS, TOP AND BOTTOM OF THE OUTSIDE OF FILTER BAG. FRONT, BACK AND BOTTOM OF FILTER BAG BEING ONE PIECE.
3. FRONT LIFTING FLAP IS TO BE USED WHEN REMOVING AND MAINTAINING FILTER BAG.
4. SIDE FLAPS SHALL BE A MAXIMUM OF TWO INCHES LONG. FOLD THE FABRIC OVER AND REINFORCE WITH MULTIPLE STITCHES.
5. FLAP POCKETS SHALL BE LARGE ENOUGH TO ACCEPT WOOD 2" X 4". THE REBAR, STEEL PIPE, OR WOOD SHALL BE INSTALLED IN THE REAR FLAP AND SHALL NOT BLOCK THE TOP HALF OF THE CURB FACE OPENING.

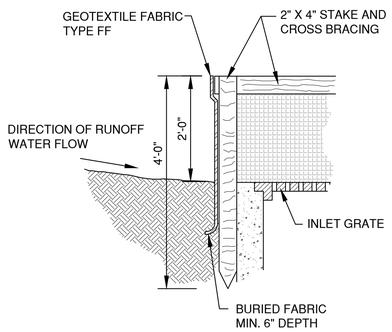

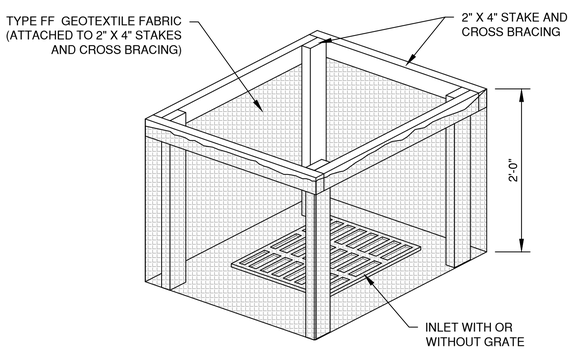

INLET PROTECTION, TYPE A

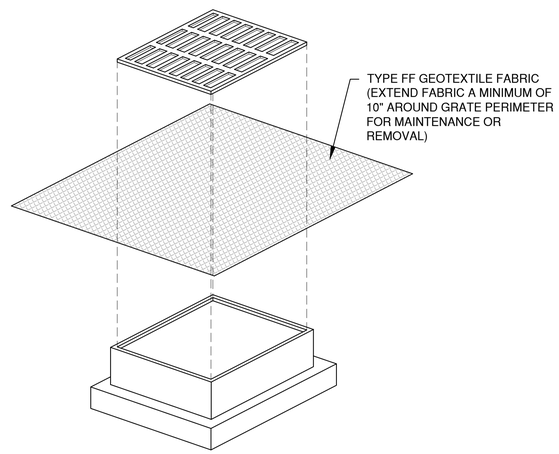

INLET PROTECTION, TYPE B
(WITHOUT CURB BOX)
(CAN BE INSTALLED IN ANY INLET WITHOUT A CURB BOX)

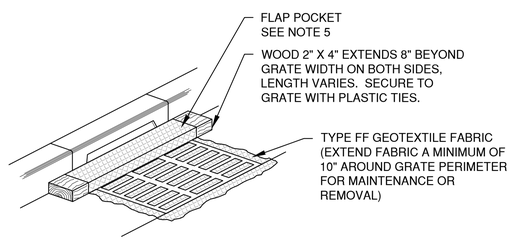

INLET PROTECTION, TYPE C
(WITH CURB BOX)

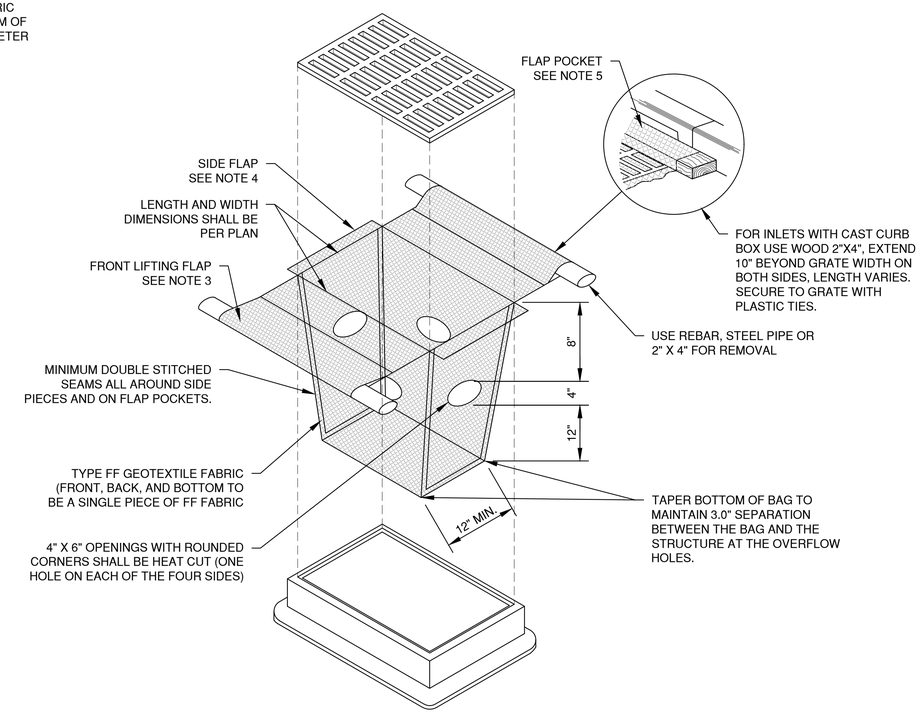

INLET PROTECTION, TYPE D
(CAN BE INSTALLED IN INLETS WITH OR WITHOUT CURB BOXES)

File: R:\6100\6137\6137005\dwg\6137005EC.dwg
Plot Date: Feb 15, 2024 - 11:52am
LAYOUT: 1 INLET PROTECTION

NO.	DATE	APPROV.	REVISION	NO.	DATE	APPROV.	REVISION
1	1/18/24	BDR	CITY SUBMITTAL				

DRAWN BDR
CHECKED ---
DESIGNED BDR

CARIBOU COFFEE DEVELOPMENT FOR
PARK PLACE HOLDINGS, LLC. - 801 MAIN AVE.
CITY OF DE PERE
BROWN COUNTY, WISCONSIN

EROSION CONTROL
INLET PROTECTION TYPES A, B, C AND D

DATE 01/2024
FILE 6137005EC
JOB NO. 6137005

Robert E. Lee & Associates, Inc.
1250 Centennial Centre Blvd | Hobart, WI | 920-662-9641 | releeinc.com

SHEET NO. 8

NOTES:

1. TAPER BOTTOM OF BAG TO MAINTAIN THREE INCHES OF CLEARANCE BETWEEN THE BAG AND THE STRUCTURE, MEASURED FROM THE BOTTOM OF THE OVERFLOW OPENINGS TO THE STRUCTURE WALL.
2. GEOTEXTILE FABRIC TYPE FF FOR FLAPS AND TOP HALF OF FILTER BAG. GEOTEXTILE FABRIC TYPE HR FOR BOTTOM HALF OF FILTER BAG. FRONT, BACK AND BOTTOM OF FILTER BAG BEING ONE PIECE.
3. FRONT LIFTING FLAP IS TO BE USED WHEN REMOVING AND MAINTAINING FILTER BAG.
4. SIDE FLAPS SHALL BE A MAXIMUM OF TWO INCHES LONG. FOLD THE FABRIC OVER AND REINFORCE WITH MULTIPLE STITCHES.
5. FLAP POCKETS SHALL BE LARGE ENOUGH TO ACCEPT WOOD 2" X 4". THE REBAR, STEEL PIPE, OR WOOD SHALL BE INSTALLED IN THE REAR FLAP AND SHALL NOT BLOCK THE TOP HALF OF THE CURB FACE OPENING.

MAINTENANCE NOTES:

WHEN REMOVING OR MAINTAINING INLET PROTECTION, CARE SHALL BE TAKEN SO THAT THE SEDIMENT TRAPPED IN THE FABRIC DOES NOT FALL INTO THE STRUCTURE. MATERIAL THAT HAS FALLEN INTO THE INLET SHALL BE IMMEDIATELY REMOVED.

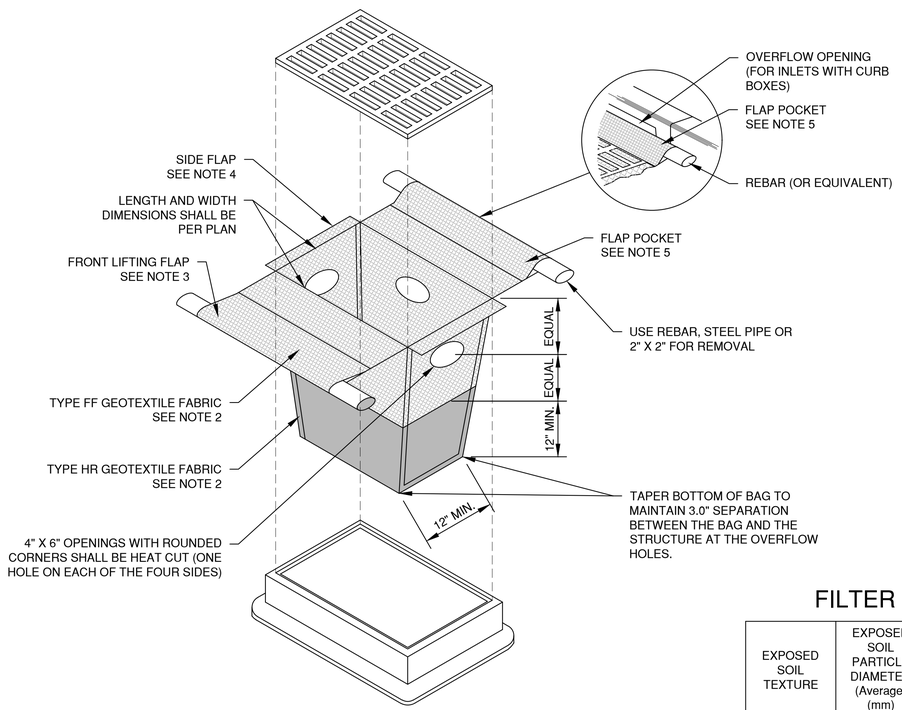

INLET PROTECTION, TYPE D-HR

(CAN BE INSTALLED IN INLETS WITH OR WITHOUT CURB BOXES)

NOTES:

1. TAPER BOTTOM OF BAG TO MAINTAIN THREE INCHES OF CLEARANCE BETWEEN THE BAG AND THE STRUCTURE, MEASURED FROM THE BOTTOM OF THE OVERFLOW OPENINGS TO THE STRUCTURE WALL.
2. GEOTEXTILE FABRIC TYPE FF FOR FLAPS, TOP AND BOTTOM OF OUTSIDE OF FILTER BAG. FRONT, BACK AND BOTTOM OF FILTER BAG BEING ONE PIECE.
3. FRONT LIFTING FLAP IS TO BE USED WHEN REMOVING AND MAINTAINING FILTER BAG.
4. SIDE FLAPS SHALL BE A MAXIMUM OF TWO INCHES LONG. FOLD THE FABRIC OVER AND REINFORCE WITH MULTIPLE STITCHES.
5. FLAP POCKETS SHALL BE LARGE ENOUGH TO ACCEPT WOOD 2" X 4". THE REBAR, STEEL PIPE, OR WOOD SHALL BE INSTALLED IN THE REAR FLAP AND SHALL NOT BLOCK THE TOP HALF OF THE CURB FACE OPENING.

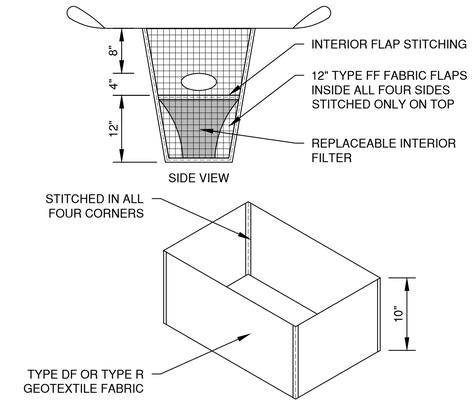

REPLACEABLE INTERIOR FILTER

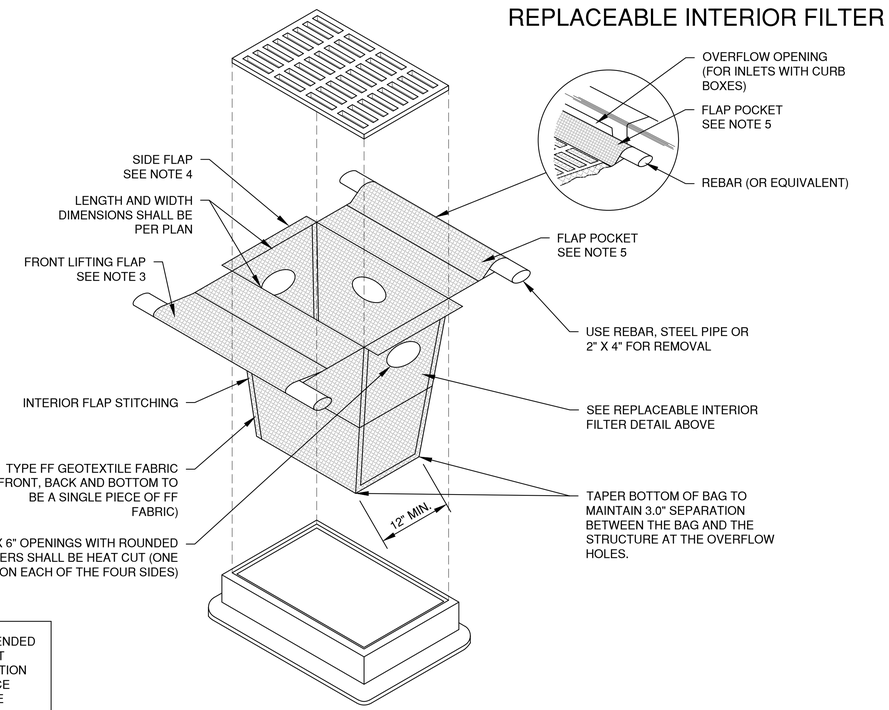

INLET PROTECTION, TYPE D-M

(CAN BE INSTALLED IN INLETS WITH OR WITHOUT CURB BOXES)

FILTER FABRIC TYPE

EXPOSED SOIL TEXTURE	EXPOSED SOIL PARTICLE DIAMETER (Average) (mm)	FILTER FABRIC TYPE*	RECOMMENDED INLET PROTECTION DEVICE TYPE
COARSE (SAND)	≥0.0625	FF	D, D-M
MEDIUM (SILT LOAM)	0.0624 - 0.005	DF	D, D-M
FINE (CLAY)	≤ 0.004	R	D-M
		HR	D-HR

* DF, R OR HR FILTERS MAY BE USED WHERE FF IS THE REQUIRED MINIMUM STANDARD. R OR HR MAY BE USED WHERE DF IS THE REQUIRED MINIMUM STANDARD.

** FOLLOW DESIGN CRITERIA OF WDNR TECHNICAL STANDARD 1060

NO.	DATE	APPROV.	REVISION	NO.	DATE	APPROV.	REVISION
1	1/18/24	BDR	CITY SUBMITTAL				

DRAWN BDR
CHECKED ---
DESIGNED BDR

CARIBOU COFFEE DEVELOPMENT FOR
PARK PLACE HOLDINGS, LLC. - 801 MAIN AVE.
CITY OF DE PERE
BROWN COUNTY, WISCONSIN

EROSION CONTROL
INLET PROTECTION
TYPE D-HR AND TYPE D-M

DATE 01/2024
FILE 6137005EC
JOB NO. 6137005

Robert E. Lee & Associates, Inc.
1250 Centennial Centre Blvd | Hobart, WI | 920-662-9641 | releeinc.com

SHEET NO. 9

File: R:\6100\6137\6137005\dwg\6137005EC.dwg
Plot Date: Feb 13, 2024 - 11:52am
LAYOUT: 2-INLET PROTECTION

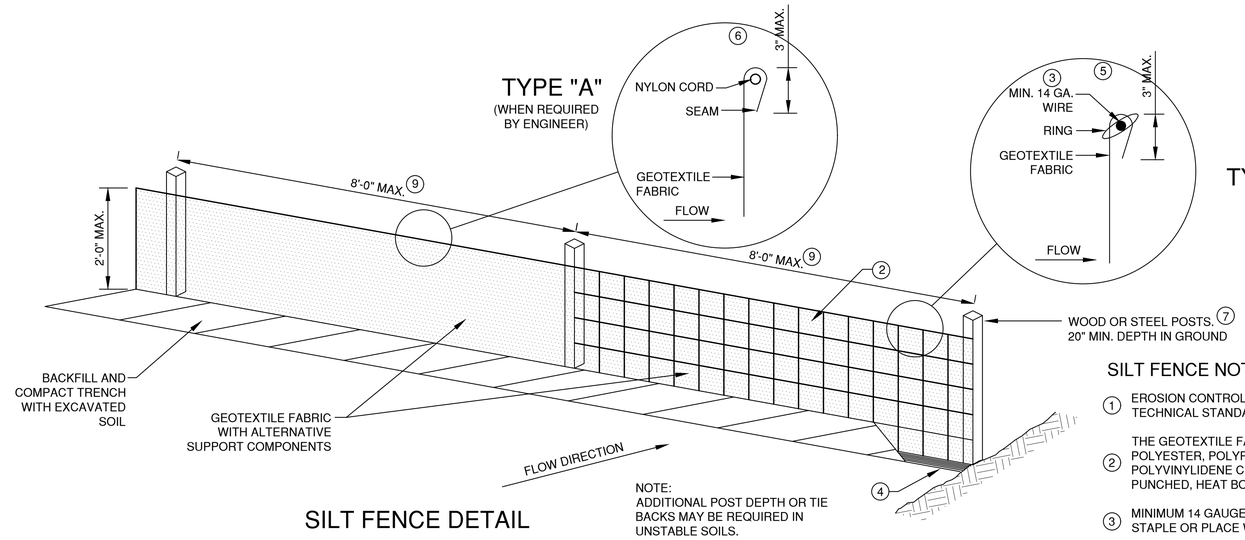

NOTE:
ADDITIONAL POST DEPTH OR TIE BACKS MAY BE REQUIRED IN UNSTABLE SOILS.

SILT FENCE DETAIL

SILT FENCE NOTES:

1. EROSION CONTROL SHALL BE PROVIDED IN ACCORDANCE WITH WDNR TECHNICAL STANDARD 1056.
2. THE GEOTEXTILE FABRIC CONSISTS OF EITHER WOVEN OR NON-WOVEN POLYESTER, POLYPROPYLENE, STABILIZED NYLON,POLYETHYLENE OR POLYVINYLIDENE CHLORIDE. NON-WOVEN FABRIC MAY BE NEEDLE PUNCHED, HEAT BONDED, RESIN BONDED, OR COMBINATIONS THEREOF.
3. MINIMUM 14 GAUGE WIRE REQUIRED, FOLD FABRIC 3" OVER THE WIRE AND STAPLE OR PLACE WIRE RINGS ON 12" C.C.
4. EXCAVATE A TRENCH A MINIMUM OF 4" WIDE AND 6" DEEP TO BURY AND ANCHOR THE GEOTEXTILE FABRIC. FOLD MATERIAL TO FIT TRENCH AND BACKFILL AND COMPACT TRENCH WITH EXCAVATED SOIL
5. WIRE SUPPORT FENCE SHALL BE 14 GAUGE MINIMUM WOVEN WIRE WITH A MAXIMUM MESH SPACING OF 6". SECURE TOP OF GEOTEXTILE FABRIC TO TOP OF FENCE WITH STAPLES OR WIRE RINGS AT 12" C.C. (TYPE B)
6. GEOTEXTILE FABRIC SHALL BE REINFORCED WITH AN INDUSTRIAL POLYPROPYLENE NETTING WITH A MAXIMUM MESH SPACING OF 3/4" OR EQUAL. A HEAVY DUTY NYLON TOP SUPPORT CORD OR EQUIVALENT IS REQUIRED. (TYPE A)
7. STEEL POSTS SHALL BE 5' LONG WITH A MINIMUM STRENGTH OF 1.33 LBS PER FOOT. WOOD POSTS SHALL BE A MINIMUM SIZE OF 1 1/8" X 1 1/8" OF OAK OR HICKORY. THE POSTS SHALL BE A MINIMUM OF 3' LONG FOR 24" SILT FENCE AND 4' LONG FOR 36" SILT FENCE.
8. CONSTRUCT SILT FENCE FROM A CONTINUOUS ROLL, IF POSSIBLE, BY CUTTING LENGTHS TO AVOID JOINTS. IF A JOINT IS NECESSARY, USE ONE OF THE FOLLOWING TWO METHODS: A.) TWIST METHOD -- OVERLAP THE END POSTS AND TWIST, OR ROTATE, AT LEAST 180 DEGREES, B:) HOOK METHOD -- HOOK THE END OF EACH SILT FENCE LENGTH.
9. THE MAXIMUM SPACING OF POSTS FOR WOVEN FABRIC SILT FENCE SHALL BE 8 FEET AND FOR NON-WOVEN FABRIC, 3 FEET.

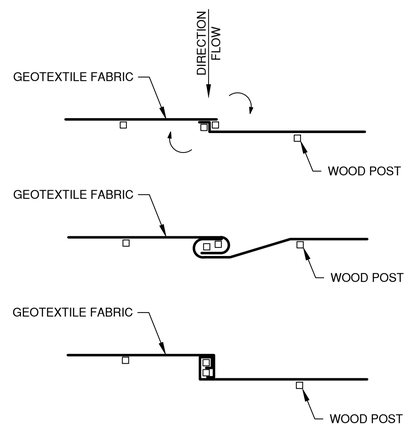

TWIST METHOD 8

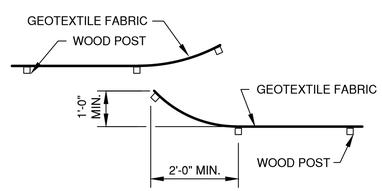

HOOK METHOD 8

JOINING TWO LENGTHS OF SILT FENCE

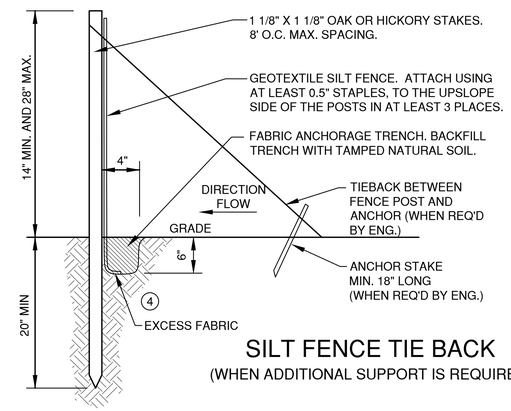

SILT FENCE TIE BACK

(WHEN ADDITIONAL SUPPORT IS REQUIRED)

EROSION CONTROL SHEET FLOW NOTES:

1. ANY SOIL STOCKPILED THAT REMAINS FOR MORE THAN 7 DAYS, SHALL BE COVERED OR TREATED WITH STABILIZATION PRACTICES SUCH AS TEMPORARY OR PERMANENT SEEDING AND MULCHING.
2. A MINIMUM OF 4" OF TOPSOIL MUST BE APPLIED TO ALL AREAS TO BE SEEDED OR SODDED.
3. ALL WASTE AND UNUSED BUILDING MATERIALS (INCLUDING GARBAGE, DEBRIS, CLEANING WASTES, WASTEWATER, TOXIC MATERIALS, OR HAZARDOUS MATERIALS) SHALL BE PROPERLY DISPOSED OF AND NOT ALLOWED TO BE CARRIED OFF-SITE BY RUNOFF OR WIND.
4. ALL OFF-SITE SEDIMENT DEPOSITS OCCURRING AS A RESULT OF CONSTRUCTION WORK OR A STORM EVENT SHALL BE CLEANED UP BY THE END OF EACH DAY. **FLUSHING SHALL NOT BE ALLOWED.**
5. ANY SOIL EROSION THAT OCCURS AFTER FINAL GRADING AND/OR THE APPLICATION OF STABILIZATION MEASURES MUST BE REPAIRED AND THE STABILIZATION WORK REDONE.
6. FOR ANY DISTURBED AREA THAT REMAINS INACTIVE FOR GREATER THAN 7 WORKING DAYS, OR WHERE GRADING WORK EXTENDS BEYOND THE PERMANENT SEEDING DEADLINES, THE SITE MUST BE TREATED WITH TEMPORARY STABILIZATION MEASURES SUCH AS SOIL TREATMENT, TEMPORARY SEEDING AND/OR MULCHING.
7. ALL TEMPORARY EROSION CONTROL PRACTICES SHALL BE MAINTAINED UNTIL THE SITE IS STABILIZED WITH 70% VEGETATION AND A NOTICE OF TERMINATION HAS BEEN APPROVED BY THE WDNR.
8. WIND EROSION SHALL BE KEPT TO A MINIMUM DURING CONSTRUCTION. WATERING, MULCH OR A TACKING AGENT MAY NEED TO BE UTILIZED TO PROTECT NEARBY RESIDENCES/WATER RESOURCES.
9. CONTRACTOR IS RESPONSIBLE FOR MAINTAINING ALL THE EROSION CONTROL MEASURES IN CONFORMANCE WITH THE WDNR CONSERVATION PRACTICE STANDARDS LATEST EDITION.
10. UPON COMPLETION OF STORM INLET CONSTRUCTION, INSTALL STORM DRAIN INLET PROTECTION FOR CONSTRUCTION SITE AS SPECIFIED.
11. FINE SEDIMENT ACCUMULATIONS SHALL BE CLEANED FROM STREETS, PRIVATE DRIVES, OR PARKING AREAS BY MANUAL OR MECHANICAL SWEEPING A MINIMUM OF ONCE A WEEK AND BEFORE ALL IMMINENT RAINS
12. EROSION AND SEDIMENT CONTROL STRUCTURES SHALL BE INSPECTED WEEKLY AND WITHIN 24 HOURS OF RAINFALL OF 0.5" OR MORE.

NO.	DATE	APPROV.	REVISION	NO.	DATE	APPROV.	REVISION
1	1/18/24	BDR	CITY SUBMITTAL				

DRAWN BDR
CHECKED ---
DESIGNED BDR

CARIBOU COFFEE DEVELOPMENT FOR
PARK PLACE HOLDINGS, LLC. - 801 MAIN AVE.
CITY OF DE PERE
BROWN COUNTY, WISCONSIN

EROSION CONTROL
SHEET FLOW DETAILS

DATE 01/2024
FILE 6137005EC
JOB NO. 6137005

Robert E. Lee & Associates, Inc.
1250 Centennial Centre Blvd | Hobart, WI | 920-662-9641 | releeinc.com

SHEET NO. 10

File: R:\61100\61137\61137005\dwg\61137005EC.dwg
Plot Date: Feb 13, 2024 - 11:52am
LAYOUT: 4 SHEET FLOW

* TRACKOUT CONTROL TO BE PROVIDED PER DETAILS BELOW AND IN ACCORDANCE WITH WDNR TECHNICAL STANDARD 1057

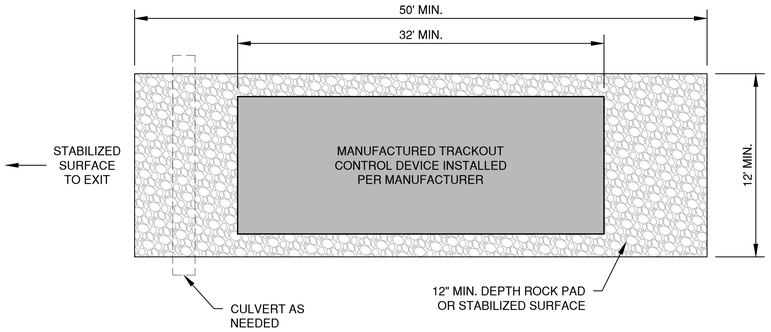

PLAN VIEW
(NTS)

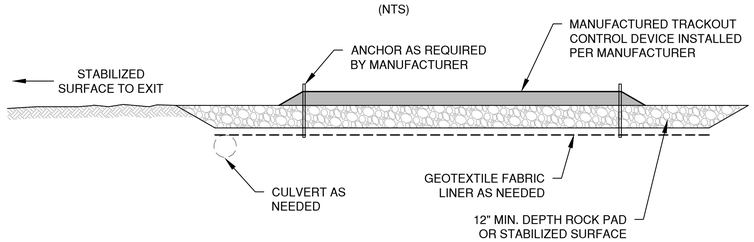

SECTION VIEW

NOTES:

1. THIS DETAIL IS PROVIDED AS AN EXAMPLE. COMPLY WITH MANUFACTURER'S SPECIFICATIONS WHILE ALSO MEETING THE MINIMUM MANUFACTURED TRACKING PAD LENGTH AND WIDTH DESCRIBED IN THIS TECHNICAL STANDARD.
2. INSTALL SUCH THAT RUNOFF FLOWS TO AN APPROVED TREATMENT PRACTICE.
3. A THINNER STONE LAYER OR OTHER STABLE SURFACE MAY BE ACCEPTABLE SUCH THAT RUTTING IS MINIMIZED AS VEHICLES MOUNT OR DISMOUNT FROM THE MANUFACTURERS TRACKOUT CONTROL DEVICE.
4. SELECT FABRIC TYPE BASED ON SOIL CONDITIONS AND VEHICLES LOADING.
5. DIRECT ALL EXISTING VEHICLES OVER MANUFACTURED TRACKOUT CONTROL DEVICE. STONE TRACKING PAD INSTALLATION ACROSS REMAINING ACCESS WIDTH IS RECOMMENDED. A 12' MINIMUM CAN BE USED WHEN EXITING TRAFFIC IS RESTRICTED TO A DEDICATED EGRESS LANE.
6. IF MINIMUM INSTALLATION LENGTH IS NOT POSSIBLE DUE TO SITE GEOMETRY, INSTALL THE MAXIMUM LENGTH PRACTICABLE AND SUPPLEMENT WITH ADDITIONAL PRACTICES AS NEEDED.
7. ACCOMMODATE EXITING VEHICLES IN EXCESS OF MANUFACTURED TRACKOUT CONTROL DEVICE WEIGHT CAPACITY WITH OTHER TREATMENT PRACTICES.

MANUFACTURED TRACKOUT CONTROL DETAIL

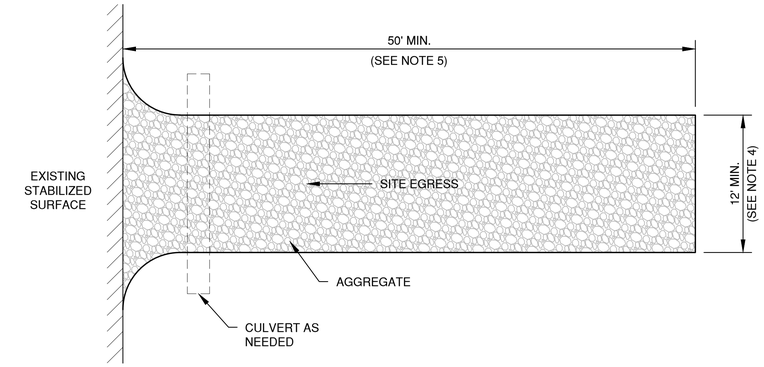

PLAN VIEW
(NTS)

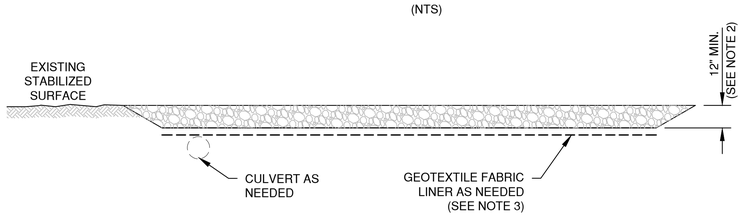

SECTION VIEW

NOTES:

1. USE HARD, DURABLE, ANGULAR STONE OR RECYCLED CONCRETE, MEETING THE FOLLOWING GRADATION:

SIEVE SIZE:	PERCENT BY WEIGHT PASSING:
3"	100
2 1/2"	90-100
1 1/2"	25-60
3/4"	0-20
3/8"	0-5

2. SLOPE THE STONE TRACKING PAD IN A MANNER TO DIRECT RUNOFF TO AN APPROVED TREATMENT PRACTICE.
3. SELECT FABRIC TYPE BASED ON SOIL CONDITIONS AND VEHICLES LOADING.
4. INSTALL TRACKING PAD ACROSS FULL WIDTH OF THE ACCESS POINT, OR RESTRICT EXISTING TRAFFIC TO A DEDICATED EGRESS LANE AT LEAST 12 FEET WIDE ACROSS THE TOP OF THE PAD.
5. IF A 50' PAD LENGTH IS NOT POSSIBLE DUE TO SITE GEOMETRY, INSTALL THE MAXIMUM LENGTH PRACTICABLE AND SUPPLEMENT WITH ADDITIONAL PRACTICES AS NEEDED.

STONE TRACKING PAD DETAIL

File: R:\6100\6137\6137005\dwg\6137005EC.dwg
Plot Date: Feb 13, 2024 - 11:52am
LAYOUT: S_TRACKOUT

NO.	DATE	APPROV.	REVISION	NO.	DATE	APPROV.	REVISION
1	1/18/24	BDR	CITY SUBMITTAL				

DRAWN BDR
CHECKED ---
DESIGNED BDR

CARIBOU COFFEE DEVELOPMENT FOR
PARK PLACE HOLDINGS, LLC. - 801 MAIN AVE.
CITY OF DE PERE
BROWN COUNTY, WISCONSIN

EROSION CONTROL
TRACKOUT CONTROL PRACTICES

DATE 01/2024
FILE 6137005EC
JOB NO. 6137005

Robert E. Lee & Associates, Inc.
1250 Centennial Centre Blvd | Hobart, WI | 920-662-9641 | releeinc.com

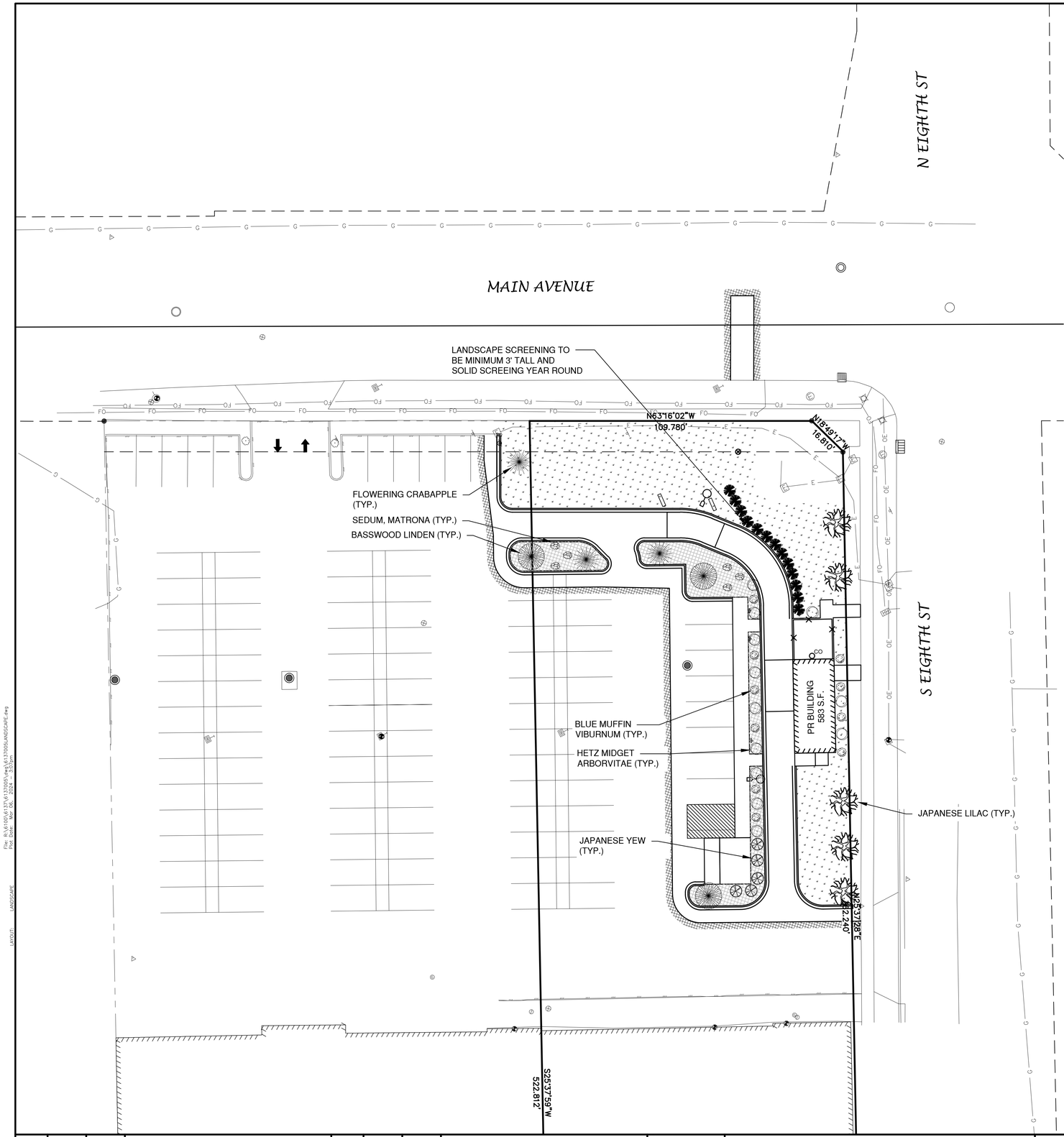

TREE LEGEND

SYMBOL	COMMON NAME	LATIN NAME	PLANT SIZE	QUANTITY
	JAPANESE TREE, IVORY SILK LILAC	SYRINGA RETICULATA "IVORY SILK"	2" CALIPER	5
	BASSWOOD LINDEN	TILIA AMERICANA	6' TALL	3
	FLOWERING CRABAPPLES	MALUS	2" CALIPER	3

SHRUBS LEGEND

SYMBOL	COMMON NAME	LATIN NAME	PLANT SIZE	QUANTITY
	BLUE MUFFIN VIBURNUM	VIBURNUM DENTATUM 'CHRISTOM'	5 GAL.	11
	HETZ MIDGET ARBORVITAE	THU JA OCCIDENTALIS 'HETZ MIDGET'	5 GAL.	12
	JAPANESE YEW	TAXUS CUSPIDATA	5 GAL.	5
	SEDUM, MATRONA	SEDUM 'MATRONA'	1 GAL.	6
	BOXWOOD	BOXUS	3' HEIGHT	13

TREE / PLANTING MAINTENANCE

MAINTAIN TREES AND PLANTINGS BY PRUNING, CULTIVATING, WATERING, WEEDING, FERTILIZING, RESTORING PLANTING SAUCERS, ADJUSTING AND REPAIRING, AND RESETTING TO PROPER GRADES OR VERTICAL POSITION, AS REQUIRED TO ESTABLISH HEALTH, VIABLE PLANTINGS. SPRAY OR TREAT AS REQUIRED TO KEEP TREES AND SHRUBS FREE OF INSECTS AND DISEASE.

NORTH

0' 20' 40'
SCALE IN FEET

AFTER LANDSCAPING IS INSTALLED, LANDSCAPER TO PROVIDE A STATEMENT TO THE CITY OF DE PERE THAT VERIFIES THAT ALL LANDSCAPING HAS BEEN INSTALLED ACCORDING TO THE APPROVED LANDSCAPING PLAN.

PRELIMINARY
Not for Construction

File: R:\6100\6137\6137005\dwg\6137005LANDSCAPE.dwg
Plot Date: Mar 06, 2024 5:07pm
LAYOUT: LANDSCAPE

NO.	DATE	APPROV.	REVISION	NO.	DATE	APPROV.	REVISION
1	1/18/24	BDR	CITY SUBMITTAL				

DRAWN BDR
CHECKED ---
DESIGNED BDR

CARIBOU COFFEE DEVELOPMENT FOR
PARK PLACE HOLDINGS, LLC.
CITY OF DE PERE
BROWN COUNTY, WISCONSIN

LANDSCAPE PLAN

DATE 01/2024
FILE 6137005LANDSCAPE
JOB NO. 6137005

Robert E. Lee & Associates, Inc.
1250 Centennial Centre Blvd | Hobart, WI | 920-662-9641 | releeinc.com

SHEET NO. L1

NOTES:
1. DO NOT CUT SINGLE LEADER. PRUNE ONLY DAMAGED, DEAD WOOD, OR CO-DOMINATE LEADERS AT MUNICIPALITY FORESTERS DIRECTION
2. ANY BROKEN, CRUMBLING, OR OTHERWISE DAMAGED ROOTBALL WILL BE REJECTED. DAMAGE DURING PLANTING OPERATIONS WILL NOT BE EXCUSED.

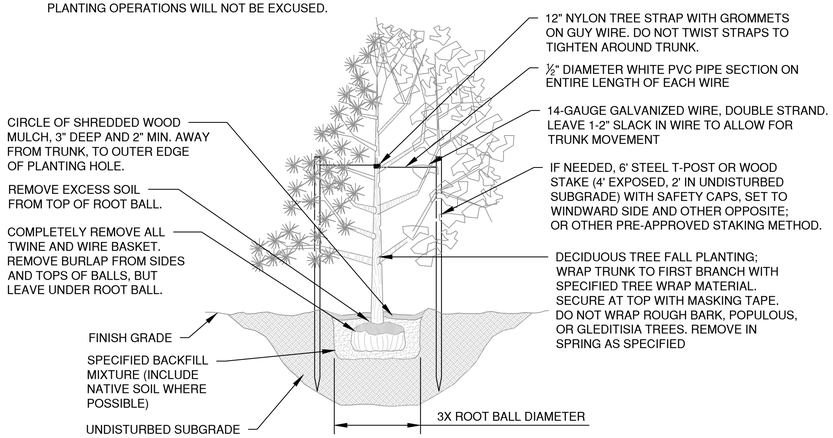

TYPICAL PLANTING, GUYING AND SPIKING EVERGREEN TREE DETAIL

NOTE:
PRUNE 20% OF BRANCHES OF DECIDUOUS SHRUBS ONLY. RETAINING NORMAL PLANT SHAPE.

SHRUB SHALL BEAR SAME RELATION TO FINISH GRADE AS IN NURSERY.

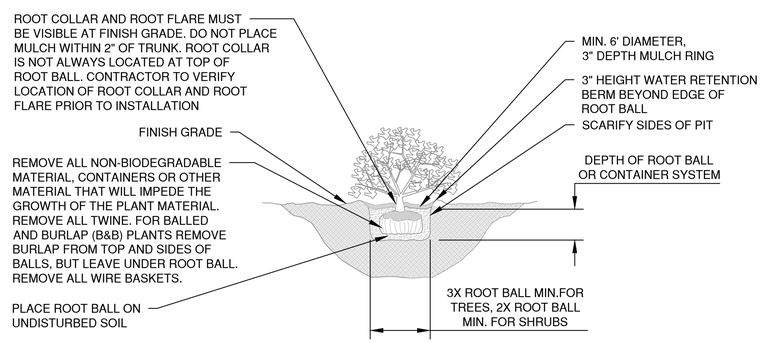

TYPICAL SHRUB PLANTING DETAIL

PRELIMINARY
Not for Construction

NO.	DATE	APPROV.	REVISION	NO.	DATE	APPROV.	REVISION
1	1/18/24	BDR	CITY SUBMITTAL				

DRAWN BDR
CHECKED ---
DESIGNED BDR

CARIBOU COFFEE DEVELOPMENT FOR
PARK PLACE HOLDINGS, LLC.
CITY OF DE PERE
BROWN COUNTY, WISCONSIN

LANDSCAPE DETAIL

DATE 01/2024
FILE 6137005LANDSCAPE
JOB NO. 6137005

Robert E. Lee & Associates, Inc.
1250 Centennial Centre Blvd | Hobart, WI | 920-662-9641 | releeinc.com

SHEET NO. L2

File: R:\61100\61137\61137005\dwg\61137005LANDSCAPE.dwg
Plot Date: Jan 18, 2024 - 12:57pm
LAYOUT: DETAIL

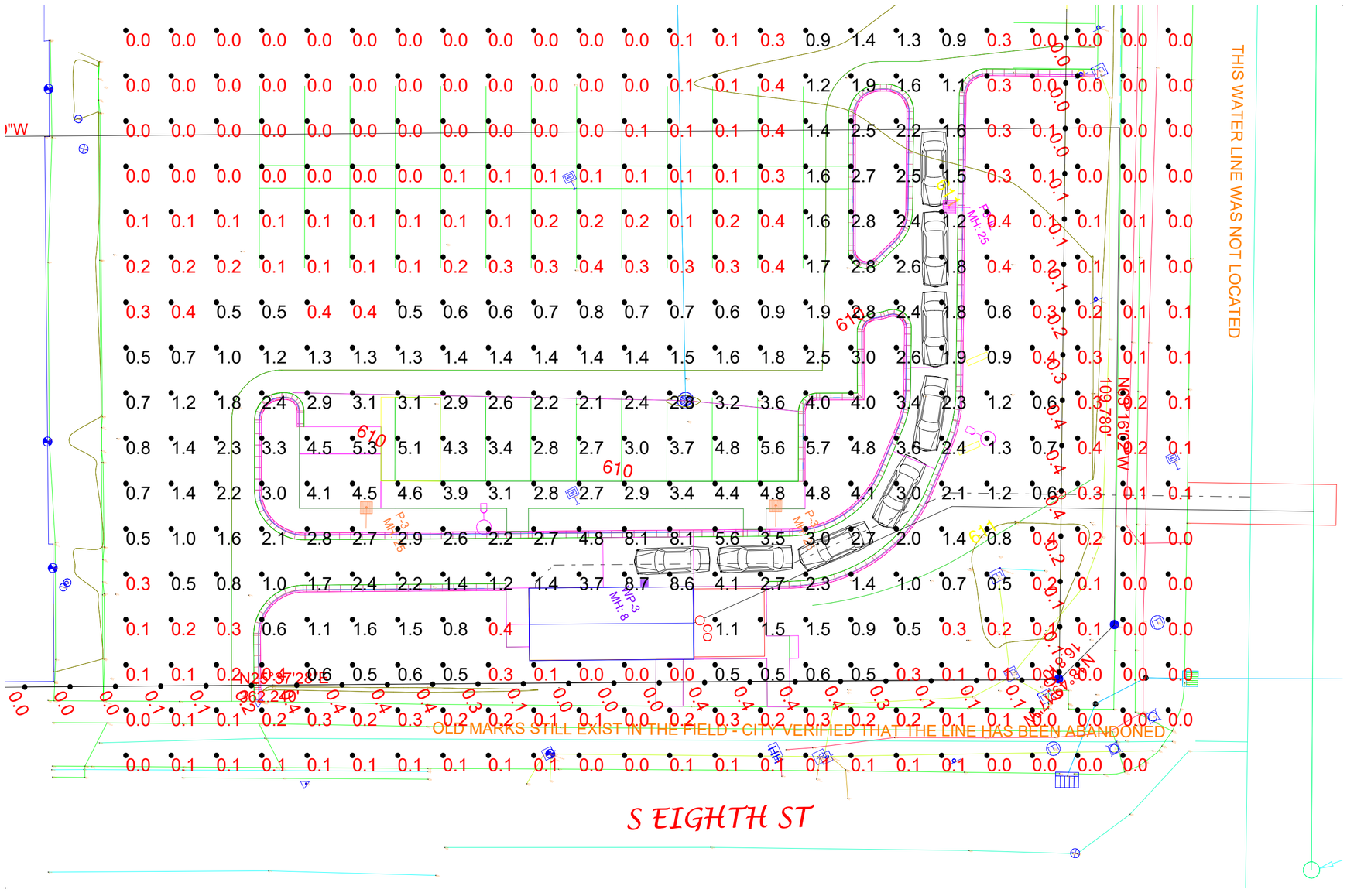

Scale: 1 inch= 20 Ft.

Luminaire Schedule										
Symbol	Qty	Label	Arrangement	Lum. Lumens	LLF	Description	Lum. Watts	Arr. Watts	Total Watts	Tag
	1	P3-IL	Single	8638	0.900	MRS-LED-12L-SIL-3-40-70CRI-IL	86	86	86	MH = 25FT
	2	P-3	Single	18417	0.900	MRS-LED-18L-SIL-3-40-70CRI	135	135	270	MH = 25FT
	1	WP-3	Single	5179	0.900	XWS-LED-05L-SIL-3-40-70CRI	35	35	35	MH=8FT

Calculation Summary							
Label	CalcType	Units	Avg	Max	Min	Avg/Min	Max/Min
CalcPts_1	Illuminance	Fc	1.06	8.7	0.0	N.A.	N.A.
Prop Line	Illuminance	Fc	0.18	0.4	0.0	N.A.	N.A.

After exterior lighting is installed, lighting contractor to provide a statement to the City of De Pere that the light spill from the property does not exceed the approved photometric plan.

These drawings are for conceptual use only and are not intended for construction. Fixture runs and quantities should be verified prior to order. Values represented are an approximation generated from manufacturers photometric inhouse or independent lab tests with data supplied by lamp manufacturers.

17x22

Visual Impact

#	Date	Comments

Revisions

Drawn By: KF
Sales Agent:
Date:3/6/2024
Scale: 1" = 4'

Caribou Coffee

DePere WI

VI920-4124-4

GENERAL NOTES

1. DO NOT SCALE THIS DRAWING IF THERE ARE ANY DISCREPANCIES CONTACT THE ARCHITECT - PRIOR TO COMMENCING WORK
2. REFER TO INTERIOR ELEVATIONS FOR FIXTURE MOUNTING HEIGHTS
3. GENERAL CONTRACTOR TO VERIFY ALL DIMENSIONS AND NOTIFY OWNER'S CONSTRUCTION MANAGER OF ANY DISCREPANCIES PRIOR TO CONSTRUCTION.
4. VERIFY THAT ALL DOORS, HARDWARE AND FRAMES MEET CODE REQUIREMENTS.
5. EXIT DOORS TO BE OPERABLE FROM INSIDE WITHOUT USE OF A KEY OR ANY SPECIAL KNOWLEDGE OR EFFORT
6. USE CEMENT BOARD AT ALL TILE LOCATIONS
7. GENERAL CONTRACTOR TO PROVIDE ALL WALL BLOCKING AND BACKING. VERIFY LOCATION WITH OWNER
8. CONTRACTOR TO PROVIDE AND INSTALL NONCOMBUSTIBLE WOOD BACKING WHEN REQUIRED BY CODE.
9. ALL TILE TO BE INSTALLED PER TILE COUNCIL OF AMERICA STANDARDS.
10. REMOVAL OF EXCESS GROUT WILL BE DONE WITH WATER, THE USE OF SULFURIC OR MURIATIC ACID IS PROHIBITED. IF THESE ACIDS ARE USED, THE INSTALLER WILL BE REQUIRED TO REMOVE THE ACID AND RESTORE THE GROUT AT THEIR EXPENSE.
11. CONTRACTOR SHALL DOCUMENT AS-BUILT INSTALLATION / CONDITIONS AND PROVIDE OWNER WITH AS-BUILT DRAWINGS AT PROJECT COMPLETION.

FLOOR PLAN KEYNOTES

1. ELECTRICAL PANELS - REFER TO ELECTRICAL DRAWINGS
2. ATTIC ACCESS OPENING ABOVE BY G.C., 36"x36" CLEAR OPENING SIZE
3. FIRE EXTINGUISHER - VERIFY TYPE & LOCATIONS WITH FIRE MARSHAL
4. CUSTOM 72"WX20"D STAINLESS STEEL TRANSACTION SHELF AT WALK-UP WINDOW SOURCED AND INSTALLED BY SHELL G.C.
5. 2X6 STUD WALL @ 16" O.C. UP TO PLYWOOD DECK - FRAMING ONLY, FINISHES BY TENANT IMPROVEMENT G.C.

DOOR & FRAME TYPES

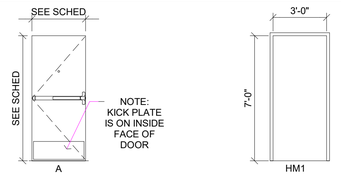

DOOR SCHEDULE

DOOR NUMBER	DOOR SIZE	DOOR TYPE	DOOR FIN.	FRAME TYPE	FRAME FIN.	HDWE GROUP	RATING	REMARKS
101	3'-0"x7'-0"X1 3/4"	A	PT	HM1	PT	A		PRE-FINISHED DOOR & FRAME

HARDWARE SETS

HARDWARE GROUP A: HM SERVICE DOOR

HINGES:	STANLEY HINGE MORT FBB179NRP 4.5x4.5 US10B (DARK OXIDIZED, SATIN BRONZE, OIL-RUBBED FINISH)
CLOSERS:	LCN 4040XP RW/PA DURO FINISH 690 (CHARCOAL GRAY FINISH)
CLOSER SCREWS:	LCN 4040XP TBSRT DURO FINISH 690 (CHARCOAL GRAY FINISH)
WEATHER STRIPPING:	REESE DS75D 36"x84" (CHARCOAL GRAY ANODIZED ALUMINUM FINISH)
THRESHOLD:	REESE S245A-36", FINISH - MILLED ALUMINUM
SWEEP:	REESE 377D 36" (CHARCOAL GRAY ANODIZED FINISH)
EXIT DEVICE:	VON DUPRIN 22EO x 3-0, FINISH 313 (DURANODIC CHARCOAL GRAY FINISH)
MORTISE CYLINDER:	SCHLAGE 20-064 OPEN FINISH 613 (DARK OXIDIZED, SATIN BRONZE, OIL RUBBED FINISH)
EXIT ALARM:	DETEX SURFACE MOUNT EAX-500SKIxEA-561 - STANDARD GRAY COLOR
DOOR SCOPE:	1000 MB DOOR SCOPE, FINISH - CHARCOAL
RAIN DRIP:	REESE R201 A 40" (MILL ALUMINUM FINISH)
KICK PLATE:	HAGER 190S-US10B 12" x 34"
DOOR PULL:	VON DUPRIN 230NL, FINISH 313 (DURANODIC CHARCOAL GRAY FINISH)

HARDWARE VENDOR:
TWIN CITY HARDWARE
5650 INTERNATIONAL PARKWAY
NEW HOPE, MN 55428
CONTACT: JAY NELSON
PH: 763-535-4660
E-MAIL: jnelson@tchco.com

NOTE:
1. ALL HARDWARE MUST BE PROVIDED BY THE HARDWARE VENDOR (TWIN CITY HARDWARE).

WINDOW TYPES

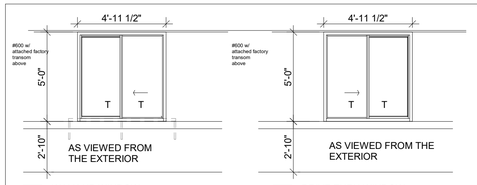

AL1 WALK-UP WINDOW
READY ACCESS
MODEL 600 CUSTOM FRAME SIZE
59-1/2"W X 60"H
(60"W X 60-3/4"H ROUGH OPENING)
SLIDES R/L FROM EXTERIOR
DARK BRONZE FRAME
3/4" SOLARBAN 70XL GLAZING
MANUAL OPEN/SELF CLOSE
72"W X 20"D SS TRANSACTION SHELF
SOURCED SEPARATELY BY G.C.

AL2 DRIVE-THRU WINDOW
READY ACCESS
MODEL 600 CUSTOM FRAME SIZE
59-1/2"W X 60"H
(60"W X 60-3/4"H ROUGH OPENING)
SLIDES L/R FROM EXTERIOR
DARK BRONZE FRAME
3/4" SOLARBAN 70XL GLAZING
MANUAL OPEN/SELF CLOSE

NOTE: 6-8 WEEK LEAD TIME ON DRIVE-THRU WINDOWS
CONTACT: ANNA ELLIS
ANNA@READY-ACCESS.COM
800-621-5045 EXT. 120

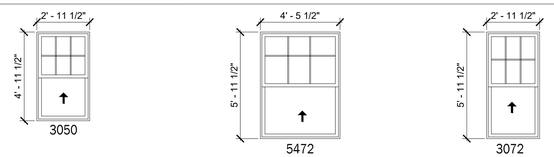

W1 ANDERSEN WINDOWS 100 SERIES, SINGLE-HUNG COLONIAL STYLE WITH SCREEN & DRIP CAP
R.O. 3'-0" x 5'-0"
LOWER GLASS: NONE
UPPER GLASS: FINELIGHT GRILLES-BETWEEN-THE-GLASS 3W2H
GRILLE BAR WIDTH: 3/4"
EXT. COLOR: DARK BRONZE
INT. COLOR: WHITE

LOW-E ARGON-FILLED INSULATED GLASS INCLUDING MATCHING GBG GRIDS (TOP SASH ONLY). COLOR TO MATCH ALUMINUM FRAMED SCREENS.

NATIONAL ACCOUNTS CONTACT:
DAVID.FANSLOW@BLDR.COM
612-490-9763

W2 ANDERSEN WINDOWS 100 SERIES, SINGLE-HUNG COLONIAL STYLE WITH SCREEN & DRIP CAP
R.O. 4'-8" x 6'-0"
LOWER GLASS: NONE
UPPER GLASS: FINELIGHT GRILLES-BETWEEN-THE-GLASS 3W2H
GRILLE BAR WIDTH: 3/4"
EXT. COLOR: DARK BRONZE
INT. COLOR: WHITE

LOW-E ARGON-FILLED INSULATED GLASS INCLUDING MATCHING GBG GRIDS (TOP SASH ONLY). COLOR TO MATCH ALUMINUM FRAMED SCREENS.

NATIONAL ACCOUNTS CONTACT:
DAVID.FANSLOW@BLDR.COM
612-490-9763

W3 ANDERSEN WINDOWS 100 SERIES, SINGLE-HUNG COLONIAL STYLE WITH SCREEN & DRIP CAP
R.O. 3'-0" x 6'-0"
LOWER GLASS: NONE
UPPER GLASS: FINELIGHT GRILLES-BETWEEN-THE-GLASS 3W2H
GRILLE BAR WIDTH: 3/4"
EXT. COLOR: DARK BRONZE
INT. COLOR: WHITE

LOW-E ARGON-FILLED INSULATED GLASS INCLUDING MATCHING GBG GRIDS (TOP SASH ONLY). COLOR TO MATCH ALUMINUM FRAMED SCREENS.

NATIONAL ACCOUNTS CONTACT:
DAVID.FANSLOW@BLDR.COM
612-490-9763

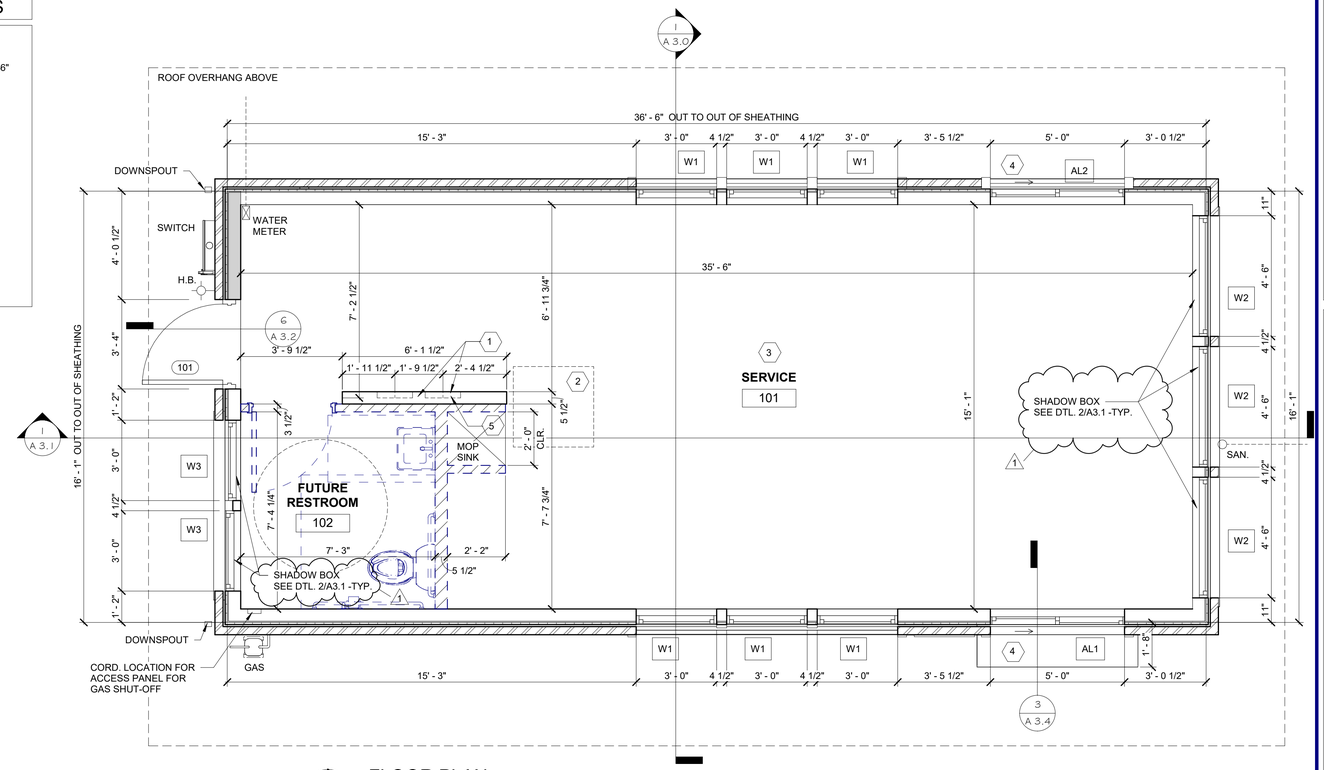

FLOOR PLAN
Scale: 3/8" = 1'-0"

ACS Architectural & Construction Services, Inc.
327 RANDOLPH DRIVE - SUITE C
APPLETON, WI 54913
TELE: 920-574-2657 FAX: 920-574-2660

Proposed Building For:

Caribou Coffee

803 Main Av. DePere, Wisconsin 54115

DATE: 03/08/24
ARCH: K. SPERL
D. BY: J.MILLER
JOB: 23-078
REV.
#1 - (3-28-24) ADDED DETAIL PER CITY REVIEW COMMENTS

A
1.0

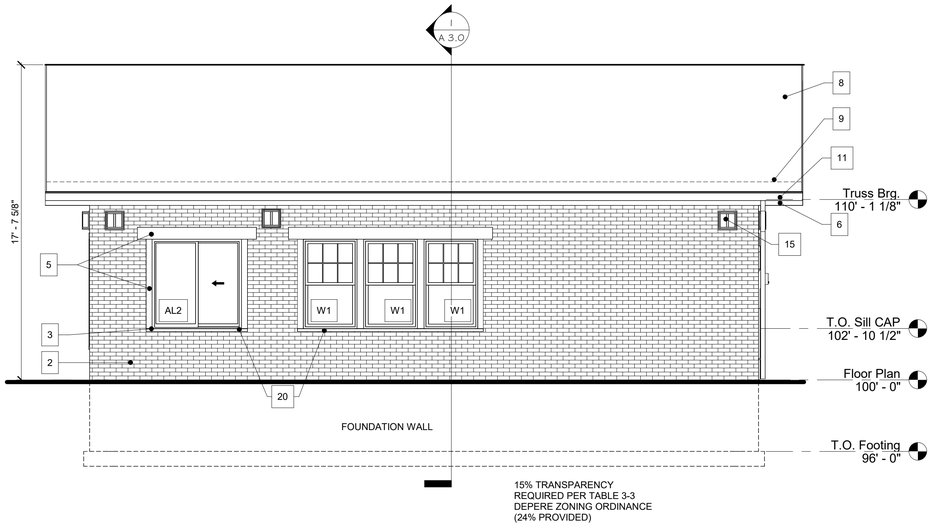

WEST ELEVATION

Scale: 1/4" = 1'-0"

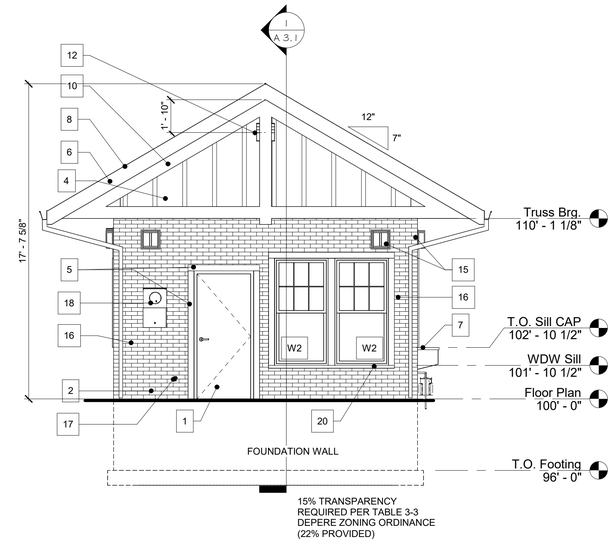

SOUTH ELEVATION

Scale: 1/4" = 1'-0"

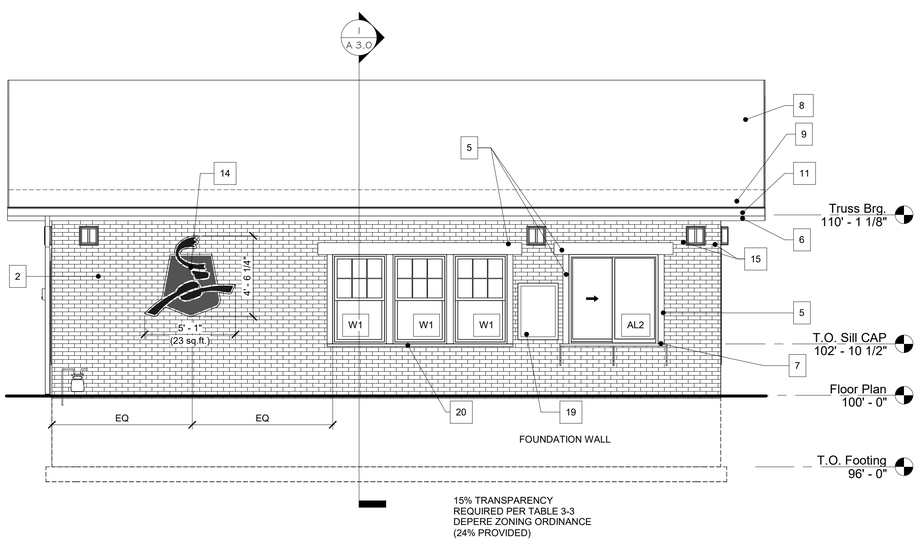

EAST ELEVATION

Scale: 1/4" = 1'-0"

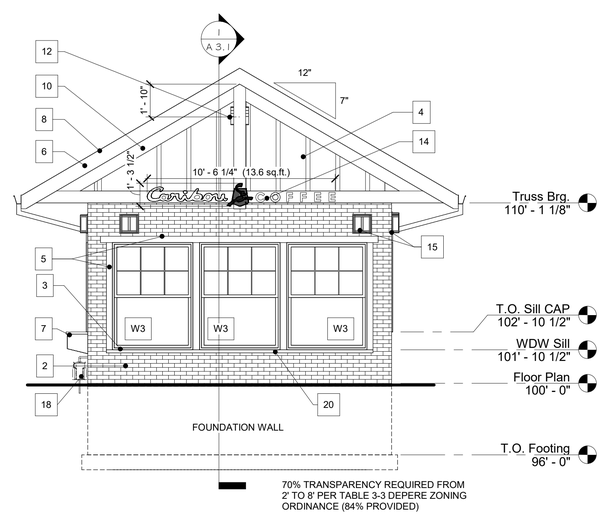

NORTH ELEVATION

Scale: 1/4" = 1'-0"

KEY NOTES

1. INSULATED, PRE-FINISHED HM DOOR & FRAME - COLOR: BENJAMIN MOORE: BITTERSWEET CHOCOLATE 2114-10. SEALANT AROUND FRAME: MASTERSEAL: SPECIAL BRONZE 259N (TO MATCH ADJACENT SIDING)
2. STANDARD BRICK - PAINTED BENJAMIN MOORE WHITE DOVE OC-17
3. PREFINISHED METAL FLASHING - COLOR TO MATCH ADJACENT STONE SILL CAP / DRIP LEDGE: EXCEPTIONAL METALS CHARCOAL GRAY OR FIRESTONE UNA-CLAD CHARCOAL GRAY
4. COMPOSITE BOARD AND BATTEN - STYLE: CEDARMILL COLOR: PRE-FINISHED (REQ'D, NO EXCEPTIONS) TO MATCH SHERWIN WILLIAMS PAINT COLOR 'CLOUDBURST' SW6487
5. HARDIE TRIM BOARDS: 1x8, 1x6 & 1x4 - STYLE: 4/4 RUSTIC. COLOR: PRE-FINISHED (REQ'D, NO EXCEPTIONS) TO MATCH BENJAMIN MOORE PAINT COLOR 2124-10 Wrought Iron 2114-10
   ALTERNATE: LP SMARTSIDE TRIM BOARDS, CEDAR TEXTURE. SEE PRE-FINISHING NOTES FOR MORE INFORMATION.
6. HARDIE TRIM FASCIA BOARDS: 1X10 - STYLE: 4/4 RUSTIC. COLOR: PRE-FINISHED (REQ'D, NO EXCEPTIONS) TO MATCH BENJAMIN MOORE PAINT COLOR 2124-10 Wrought Iron 2114-10
   ALTERNATE: LP SMARTSIDE FASCIA BOARDS, CEDAR TEXTURE. SEE PRE-FINISHING NOTES FOR MORE INFORMATION.
7. STAINLESS STEEL TRANSACTION SHELF. SEE WINDOW TYPES ON A-100. NOTE: SHELF TO BE SOURCED AND INSTALLED BY G.C. SEE 1/A-304 FOR WALL DETAILS
8. STANDING SEAM METAL ROOFING WITH RIDGE VENT: MATCH UNA-CLAD UC-4 SNAP-ON BATTEN ARCHITECTURAL SERIES ROOFING, 16" O.C., 24 GA. GALVANIZED STEEL W/ KYNAR 500 COATING. COLOR: CHARCOAL GRAY. ROOF METAL FLASHING COLOR: CHARCOAL GRAY TO MATCH ROOF
9. METAL ROOFING SNOW GUARD: S-5 COLORGARD OR EQUAL. MATCH UNA-CLAD COLOR: CHARCOAL GRAY
10. DECORATIVE END TRUSS: LP SMARTSIDE 540 SERIES CEDAR TEXTURE TRIM, PRE-FINISHED (REQ'D, NO EXCEPTIONS) TO MATCH BENJAMIN MOORE PAINT COLOR 2124-10 Wrought Iron 2114-10 (SEE 1/A3.3 FOR DETAILS)
11. 5" PRE-FINISHED METAL GUTTERS WITH 4"x4" OPEN-FACED DOWNSPOUT SYSTEM. 8'-6" CLEAR HEIGHT REQUIRED AT DOWNSPOUT CONNECTION. COLOR TO BE CHARCOAL GRAY TO MATCH STANDING SEAM ROOF. PROVIDE CONNECTION TO STORM SEWER SYSTEM AT DOWNSPOUTS - SEE CIVIL DRAWINGS FOR MORE INFORMATION. PROVIDE HEAT TAPE - SEE ELECTRICAL DRAWINGS FOR MORE INFORMATION.
12. INTAKE LOUVER AT GABLE END WALL. VERIFY SIZE WITH MEP. PAINT BENJAMIN MOORE PAINT COLOR 2124-10 Wrought Iron 2114-10. - SEE MECHANICAL DRAWINGS FOR MORE INFORMATION.
13. WINDOW FILM WITH 'BOLD NORTH' DESIGN. SUPPLIED BY ARCHETYPE AND INSTALLED BY TENANT IMPROVEMENT G.C.
    CONTACT: JENNY KRUSE
    PHONE: 952-641-9602
    EMAIL: JENNYK@ARCHETYPESIGN.COM
    PROJECTMANAGER@ARCHETYPESIGN.COM
14. ILLUMINATED CARIBOU SIGNAGE N.I.C. SUPPLIED AND INSTALLED BY SIGN VENDOR. PROVIDE ELECTRICAL AS SHOWN ON ELECTRICAL PLANS. G.C. TO VERIFY DESIGN, DIMENSIONS, BRACKET INSTALLATION REQUIREMENTS, AND ELECTRICAL REQUIREMENTS WITH SIGN VENDOR PRIOR TO ROOFING INSTALL.
15. LIGHT FIXTURES - SEE ELECTRICAL PLANS - INSTALL WALL SCONCES ON 4/4 SMOOTH HARDIE TRIM BOARD MOUNTING PLATE PAINTED BENJAMIN MOORE PAINT COLOR 2124-10 Wrought Iron 2114-10. SEE PRE-FINISHING NOTES FOR MORE INFORMATION. INSTALL EM PACK ABOVE REAR DOOR BEHIND DECORATIVE TRUSS.
16. 5" PRE-FINISHED METAL GUTTERS WITH 4"x4" OPEN-FACED DOWNSPOUT SYSTEM. 8'-6" CLEAR HEIGHT REQUIRED AT DOWNSPOUT CONNECTION. COLOR TO BE CHARCOAL GRAY TO MATCH STANDING SEAM ROOF. PROVIDE CONNECTION TO STORM SEWER SYSTEM AT DOWNSPOUTS - SEE CIVIL DRAWINGS FOR MORE INFORMATION. PROVIDE HEAT TAPE - SEE ELECTRICAL DRAWINGS FOR MORE INFORMATION.
17. EXTERIOR HOSE-BIBB - SEE PLUMBING PLANS FOR MORE INFORMATION
18. FIELD VERIFY AND COORDINATE LOCATION OF EXTERIOR ELECTRICAL AND OTHER UTILITY SERVICE EQUIPMENT WITH SITE CONDITIONS AND OTHER SITE AND BUILDING EQUIPMENT (I.E. ROOF DRAINAGE AND DOWNSPOUTS, ETC.) SEE MECHANICAL, ELECTRICAL AND PLUMBING PLANS FOR MORE INFORMATION
19. 27"x38 WALK-UP MENU BOARD (PROVIDED BY CARIBOU, INSTALLED BY TENANT IMPROVEMENT G.C., VERIFY SIZE) - COORDINATE WITH OWNER PRIOR TO SIDING INSTALL.
20. CULTURED STONE SILL CAP

PRE-FINISHING NOTES

FOR KEYNOTE 5 & 6 (HARDIE TRIM BOARD MOUNTING PLATE, HARDIE TRIM BOARDS, & HARDIE TRIM FASCIA BOARDS: IF PRE-FINISHED BY FACTORY USE JAMES HARDIE SPEC DREAM COLLECTION, BLACK FIG.
IF PRE-FINISHED IN SHOP BEFORE ARRIVING ON SITE USE BENJAMIN MOORE 2124-10 WROUGHT IRON. IF USING SHERWIN- WILLIAMS, MUST MATCH BM 2124-10 Wrought Iron.

FOR KEYNOTE 4 (HARDIE PLANK LAP SIDING OR VERTICAL PANEL SIDING): IF PRE-FINISHED BY FACTORY- USE JAMES HARDIE SPEC DREAM COLLECTION, COLONIAL BLUE. IF PRE-FINISHED IN SHOP BEFORE ARRIVING ON SITE, USE BENJAMIN MOORE TO MATCH SHERWIN-WILLIAMS PAINT COLOR 'CLOUDBURST' SW6487.

NOTES:
SUBMIT SAMPLES AND COLOR CHARTS FOR ALL BUILDING FINISHES. COLORS & FINISHES INCLUDING ROOFING, SIDING, TRIM AND CULTURED STONE
ARE SUBJECT TO CHANGE PENDING LEAD TIMES AND FINAL REVIEW AND APPROVAL BY OWNER & ARCHITECT.

ACS Architectural & Construction Services, Inc.
327 RANDOLPH DRIVE - SUITE C
APPLETON, WI 54913
TELE: 920-574-2657 FAX: 920-574-2660

Proposed Building For:

Caribou Coffee

803 Main Av. DePere, Wisconsin 54115

DATE: 02/28/24
ARCH: K. SPERL
D. BY: J.MILLER
JOB: 23-078
REV.

A
2.0

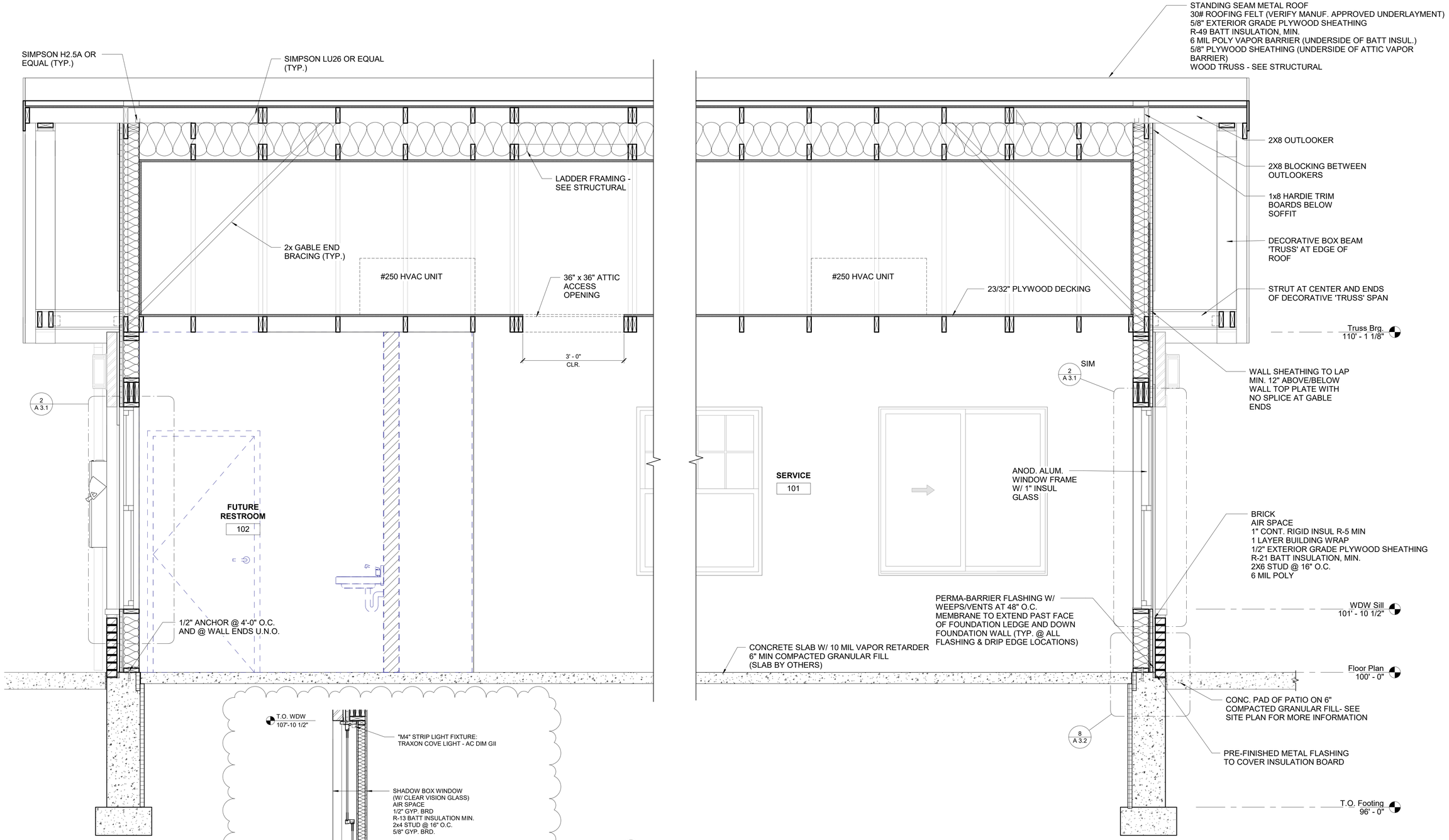

1 A 3.1 BUILDING SECTION 2
3/4" = 1'-0"

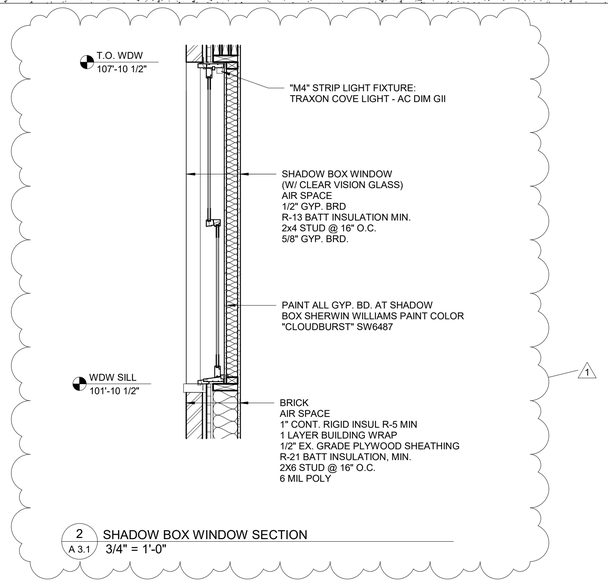

2 A 3.1 SHADOW BOX WINDOW SECTION
3/4" = 1'-0"

ACS Architectural & Construction Services, Inc.
327 RANDOLPH DRIVE - SUITE C
APPLETON, WI 54913
TELE: 920-574-2657 FAX: 920-574-2660

Proposed Building For:

Caribou Coffee

803 Main Av. DePere, Wisconsin 54115

DATE: 03/08/24
ARCH: K. SPERL
D. BY: J.MILLER
JOB: 23-078
REV.
#1 - (3-28-24) ADDED DETAIL PER CITY REVIEW COMMENTS

A
3.1

CODE REVIEW

PROJECT DESCRIPTION:

SHELL BUILDING IS 1 STORY WITH 605 GSF AND VB TYPE OF CONSTRUCTION. (605 GSF TO OUTSIDE FACE OF FOUNDATION WALL).
TENANT IMPROVEMENT IS 532 SF. (INSIDE PERIMETER OF EXTERIOR WALLS)
THE BUILDING IS NOT FIRE SPRINKLERED.

BUILDING DATA AND PROPOSED USE:

CARIBOU COFFEE (B) BUSINESS OCCUPANCY: RESTAURANT WITH LESS THAN 50 OCCUPANTS

APPLICABLE GOVERNING STANDARDS

2020 MINNESOTA BUILDING CODE
2018 INTERNATIONAL BUILDING CODE
2020 MINNESOTA ACCESSIBILITY CODE
2020 NATIONAL ELECTRIC CODE
2020 MINNESOTA PLUMBING CODE
2020 MINNESOTA MECHANICAL AND FUEL GAS CODE
2020 MINNESOTA ENERGY CODE (2018 IECC)

BUILDING SEPARATION CHAPTER 5, SECTION 506, 506.3.2

DISTANCES TO PROPERTY LINES: GREATER THAN 30'-0 (SEE CIVIL SITE PLANS)

USE AND OCCUPANCY CLASSIFICATION (MNBC CHAPTER 3):

PROPOSED OCCUPANCY PER MNBC 302, 303.1, 303.1.1, 304.1

CARIBOU COFFEE (B) BUSINESS OCCUPANCY
- RESTAURANT WITH LESS THAN 50 OCCUPANTS

SPECIAL DETAILED REQUIREMENTS BASED ON USE & OCCUPANCY (MNBC CHAPTER 4):

N/A FOR THIS SHELL BUILDING - RESTAURANT (B) BUSINESS WITH LESS THAN 50 OCCUPANTS

GENERAL BUILDING HEIGHTS AND AREAS (MNBC CHAPTER 5):

BUILDING HEIGHTS AND AREAS SECTIONS 503, 504, 506

1. BASIC ALLOWABLE FLOOR AREA, VB CONSTRUCTION TYPE & "B" OCCUPANCY) (TABLE 506.2)	9,000 SF
INCREASE FOR FRONTAGE (SECTION 506.3) N/A	N/A THIS PROJECT
2. TOTAL ALLOWABLE AREA: NO FRONTAGE REQUIRED	9,000 SF
ACTUAL BUILDING AREA:	605 GSF
3. ALLOWABLE STORIES (TABLE 504.4)	TWO STORIES
ACTUAL STORIES	ONE STORY
4. ALLOWABLE HEIGHT TABLE 504.3)	40 FT
ACTUAL BUILDING HEIGHT	17'-8"

CONSTRUCTION TYPE (MNBC CHAPTER 6):

BUILDING IS CONSTRUCTION TYPE VB AND IS NOT FIRE SPRINKLERED
(MNBC SECTION 602.5)

FIRE RESISTANCE RATING REQUIREMENTS FOR BUILDING ELEMENTS HOURS (TABLE 601)

- STRUCTURAL FRAME	0 HR
- BEARING WALLS (INTERIOR & EXTERIOR)	0 HR
- NON-BEARING WALLS (INTERIOR & EXTERIOR)	0 HR
- FLOOR CONSTRUCTION-INCLUDING SUPPORTING BEAMS AND JOISTS	0 HR
- ROOF CONSTRUCTION-INCLUDING SUPPORTING BEAMS AND JOISTS	0 HR
- CORRIDORS (TABLE 1020.1)	N/A (THIS PROJECT HAS NO CORRIDORS)

INTERIOR FINISHES (MNBC CHAPTER 8)

SECTION 803 AND TABLE 803.13 - INTERIOR WALL AND CEILING FINISHES FOR OCCUPANCY GROUP B:
NON-SPRINKLERED: CLASS C - FOR ROOMS AND ENCLOSED SPACES.
SPRINKLERED: CLASS C - FOR ROOMS AND ENCLOSED SPACES.

FIRE PROTECTION SYSTEMS (MNBC CHAPTER 9):

BUILDING WILL NOT BE FIRE SPRINKLERED.

OCCUPANT LOAD (MNBC CHAPTER 10):

OCCUPANT LOAD FACTORS (TABLE 1004.5):
-KITCHEN SPACES @ 1 PERSON PER 200 GROSS SQ. FT.
-ACCESSORY SPACES CLASSIFIED AS BUSINESS AREAS @ 1 PERSON PER 150 GROSS SQ. FT.

NOTE: TOTAL BUILDING GROSS FLOOR AREA INSIDE PERIMETER OF EXTERIOR WALLS AND NOT INCLUDING INTERIOR DEMISING WALLS IS: 522 SF

				EXITS (SECTION 1006.2.1) REQ'D / PROVIDED	EXIT WIDTH (SECTION 1005.1) REQ'D / PROVIDED
KITCHEN / SERVICE	422 SF / 200	=	3 OCCUPANTS	1/1	(3x0.2=1.2") 0.6" / 36"
ACCESSORY (RESTROOM, MANAGER)	100 SF / 100	=	1 OCCUPANTS	1/1	(1x0.2=0.2) 0.2" / 36"
TOTALS	522 SF	=	4 + 16 OUTDOOR SEASONAL PATIO SEATS = 20 OCCUPANTS		(20x0.2=4.0") 4.0" / 36"

MEANS OF EGRESS/EXIT REQUIREMENTS (MNBC CHAPTER 10):

SECTION 1005 - MEANS OF EGRESS SIZING
1005.3.1 STAIRWAYS: N/A THIS BUILDING HAS NO STAIRS
1005.3.2 OTHER EGRESS COMPONENTS - MEANS OF EGRESS CAPACITY FACTOR OF 0.2" MINIMUM PER OCCUPANT.
TOTAL/ACTUAL ACCESSIBLE EXITS: 1 ACCESSIBLE EXIT DOOR WITH A TOTAL EXIT WIDTH OF 34 INCHES
TOTAL/ALL EXITS: 1 EXIT DOOR WITH A TOTAL EXIT WIDTH OF 34 INCHES

SECTION 1009 - ACCESSIBLE MEANS OF EGRESS
ACCESSIBLE EXITS - ACCESSIBLE EXITS ARE SHOWN AND LABELED ON THE CODE REVIEW FLOOR PLAN
2020 MINNESOTA ACCESSIBILITY CODE:
SECTION 1105.1 PUBLIC ENTRANCES_AT LEAST 60 PERCENT OF ALL PUBLIC ENTRANCES SHALL BE ACCESSIBLE
1 PUBLIC ENTRANCES X 60% = 0.6 = 1 REQUIRED TO BE ACCESSIBLE - 1 ACCESSIBLE PUBLIC ENTRANCE IS PROVIDED.

SECTION 1010 - DOORS
1010.1.1 SIZE OF DOORS
THE MINIMUM WIDTH OF EACH DOOR OPENING SHALL BE SUFFICIENT FOR THE OCCUPANT LOAD THEREOF AND SHALL PROVIDE A CLEAR WIDTH OF 32 INCHES

SECTION 1011 STAIRWAYS - N/A THIS BUILDING HAS NO INTERIOR STAIRS
SECTION 1012 RAMPS - N/A THIS BUILDING NO INTERIOR RAMPS
SECTION 1014 HANDRAILS - N/A THIS PROJECT HAS NO INTERIOR STAIRS OR RAMPS

SECTION 1006, TABLE 1006.2.1 - EXIT ACCESS, COMMON PATH OF EGRESS TRAVEL - BUILDING WITH NO SPRINKLER SYSTEM AND OCCUPANT LOAD OF 30 OR LESS:
TABLE 1006.2.1: "B" OCCUPANCIES WITH OCCUPANT LOAD LESS THAN 30:
MAX. TRAVEL DISTANCE = 100'-0" (WITH NO SPRINKLER SYSTEM)

SECTION 1017 - EXIT ACCESS TRAVEL DISTANCE
A, B, E, F-1, M, R, S-1 OCCUPANCIES
EXIT ACCESS TRAVEL DISTANCE - BUILDING WITH NO SPRINKLER SYSTEM
TABLE 1017.2: "B" OCCUPANCIES: MAX. TRAVEL DISTANCE = 200'-0" (WITH NO SPRINKLER SYSTEM)

SECTION 1018.2.2 MINIMUM AISLE WIDTH
EXCEPTION: NONPUBLIC AISLES SERVING FEWER THAN 50 PEOPLE, AND ARE NOT REQUIRED TO BE ACCESSIBLE BY IBC CHAPTER 11, OR MINNESOTA BUILDING CODE CHAPTER 1341 NEED NOT EXCEED 28" INCHES IN WIDTH

SECTION 1004.7 OUTDOOR AREAS (I.E. EXTERIOR PATIO AREA)
ANY OCCUPANTS FOR THE EXTERIOR PATIO AREA FOR THIS PROJECT WILL NOT HAVE TO TRAVEL THROUGH THE BUILDING IN ORDER TO HAVE ACCESS TO A MEANS OF EGRESS. THUS THE OCCUPANT LOAD FOR THE PATIO AREA OCCUPANTS DOES NOT HAVE TO BE INCLUDED IN THE TOTAL BUILDING OCCUPANT LOAD.

MINNESOTA ACCESSIBILITY CODE: SECTION 1103 ACCESSIBLE ENTRANCES

SECTION 1103.2.2 EMPLOYEE WORK AREA: SPACES AND ELEMENTS WITHIN EMPLOYEE WORK AREAS SHALL ONLY BE REQUIRED TO COMPLY WITH SECTIONS MNBC 907.5.2.3.1, 1009 AND MN ACCESSIBILITY CODE 1104.3.1 AND SHALL BE DESIGNED AND CONSTRUCTED SO THAT INDIVIDUALS WITH DISABILITIES CAN APPROACH, ENTER AND EXIT THE WORK AREA.

MINNESOTA ACCESSIBILITY CODE: SECTION 1105 ACCESSIBLE ENTRANCES

SECTION 1105.1.5. IF A SERVICE ENTRANCE IS THE ONLY ENTRANCE TO A BUILDING OR A TENANT SPACE IN A FACILITY, THAT ENTRANCE SHALL BE ACCESSIBLE.

PLUMBING FIXTURES (MNBC CHAPTER 29 - TABLE 2902.1)

NOTE: A RESTROOM WILL BE PROVIDED FOR THE CARIBOU COFFEE SHOP AS PART OF THE INTERIOR TENANT BUILD-OUT.

COFFEE SHOP - ("B" OCCUPANCY WITH 4 OCCUPANTS AND UP TO 16 OUTDOOR PATIO SEATS)
TOTAL OCCUPANT LOAD = 4 + 16 OUTDOOR SEASONAL PATIO SEATS = 20 OCCUPANTS

20 OCCUPANTS CARIBOU COFFEE SHOP = 20/2 = 10 FEMALE AND 10 MALE

TABLE 2902.1 KEYNOTE d: The occupant load for seasonal outdoor seating and entertainment areas shall be included when determining the minimum number of facilities required.
TABLE 2902.1 KEYNOTE h: A drinking fountain shall not be required in buildings or tenant spaces having an occupant load of less than 50.
TABLE 2902.1 KEYNOTE i: Where water is served in restaurants, drinking fountains shall not be required.

2902.2 SEPARATE FACILITIES, EXCEPTION 2: SEPARATE FACILITIES SHALL NOT BE REQUIRED IN STRUCTURES OR TENANT SPACES WITH A TOTAL OCCUPANT LOAD, INCLUDING EMPLOYEES AND CUSTOMERS, OF 25 OR LESS.

DRINKING FOUNTAINS ("B" OCCUPANCY)
1 per 100 OCC = 1 DRINKING FOUNTAIN (ALSO SEE 410.1 OF THE INTERNATIONAL PLUMBING CODE)
International PLUMBING CODE SECTION 410: WHERE WATER IS SERVED IN RESTAURANTS, DRINKING FOUNTAINS SHALL NOT BE REQUIRED. WATER WILL BE SERVED IN THE CARIBOU COFFEE SHOP - NO DRINKING FOUNTAIN WILL BE PROVIDED.

SERVICE SINKS - 1 REQUIRED (OR ALSO SEE TABLE 2902.1 KEYNOTE e FOR BUSINESS & MERCANTILE OCCUPANCIES)

ACTUAL FIXTURE COUNT PROVIDED TO SERVE CARIBOU COFFEE SHOP:
SINGLE-USE TOILET ROOM: WC. = 1 WC
LAV = 1 LAV.
1 SERVICE/MOP SINK WILL BE PROVIDED.

THIS CODE REVIEW AND CODE REVIEW SHELL BUILDING FLOOR PLAN MUST BE REVIEWED, EDITED AND UPDATED BY THE ARCHITECT OR ENGINEER OF RECORD BASED ON PROJECT LOCATION AND STATE.

NOTE: CHECK FOR JURISDICTIONAL RECYCLING SPACE REQUIREMENTS BASED ON PROJECT STATE AND LOCATION.

STATE OF MINNESOTA
RECYCLING SPACE REQUIREMENT:
(MINNESOTA STATUTES SECTION 1303.1500)
MINIMUM AMOUNT OF RECYCLING SPACE REQUIRED MUST BE THE NUMBER OF SQUARE FEET DETERMINED BY MULTIPLYING THE GROSS SQUARE FEET OF FLOOR AREAS ASSIGNED TO EACH USE WITHIN A BUILDING AS SET FORTH IN SUBPART 5, TABLE 1-A, TIMES THE CORRESPONDING FACTOR.

USE/GROSS SF	FACTOR	TOTAL
COMMERCIAL KITCHEN 469 SF	x .003	= 1.407 SF
		= 1.407 SF

RECYCLING SPACE FOR THIS PROJECT WILL BE LOCATED OUTSIDE AND ADJACENT TO THE TRASH ENCLOSURE - SEE SITE PLAN FOR MORE INFORMATION

PROVIDE FIRE EXTINGUISHERS PER FIRE MARSHAL REQUIREMENTS. PROVIDE A 4A-20BC (10 LB.) PORTABLE FIRE EXTINGUISHER IN KITCHEN AREA.

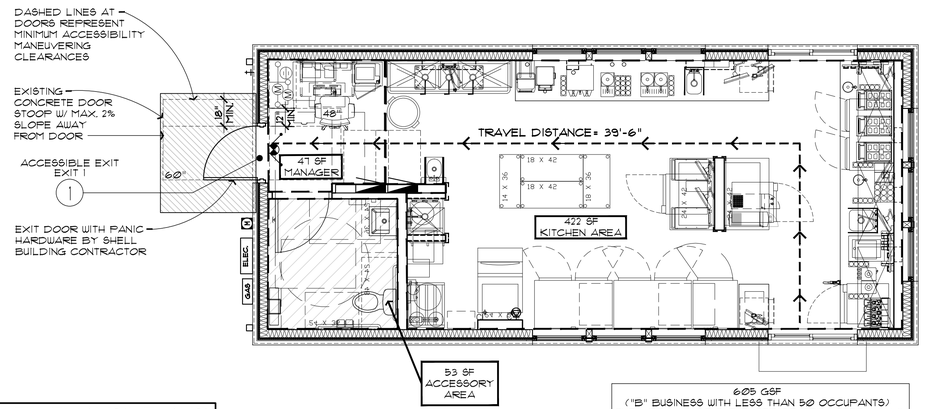

605 GSF
("B" BUSINESS WITH LESS THAN 50 OCCUPANTS)
THE AREA INSIDE THE EXTERIOR PERIMETER WALLS IS 532 GSF

NOTE: NUMBER OF EXTERIOR SEASONAL PATIO SEATS IS 16. SEE SITE PLAN DRAWINGS A1.0 AND A1.1 FOR MORE INFORMATION.

PLAN NORTH

1 CODE REVIEW – FLOOR PLAN
1/4" = 1'-0"

NUMBER OF PATIO SEATS IS TO BE 16 IF SITE LAYOUT ALLOWS (4 TABLES AND 3 UMBRELLAS). VERIFY FINAL PATIO SEAT COUNT BASED ON SITE CONDITIONS.

THIS CODE REVIEW EXAMPLE AND SHELL BUILDING FLOOR PLAN EXAMPLE ARE NOT FOR PERMIT OR CONSTRUCTION. THIS CODE REVIEW EXAMPLE IS BASED ON THE STATE OF MINNESOTA CODES AS OF MARCH 28, 2023. THIS CODE REVIEW MUST BE COMPLETED AND/OR MODIFIED BY A LICENSED ARCHITECT AND ENGINEER TO CONFORM TO ALL LOCAL AND APPLICABLE CODES AND SPECIFIC SITE CONDITIONS. THERE IS NO WARRANTY, WHETHER IMPLIED OR EXPRESSED THAT THIS CODE REVIEW MEETS THE APPLICABLE CODE REQUIREMENTS. LIABILITY FOR THE DESIGN AND ANY USE OF THIS CODE REVIEW IS THE SOLE RESPONSIBILITY OF THE ARCHITECT AND ENGINEER OF RECORD.

THESE DOCUMENTS ARE NOT FOR PERMIT OR CONSTRUCTION.

THEY MUST BE COMPLETED AND/OR MODIFIED BY A LICENSED ARCHITECT AND ENGINEERED TO CONFORM TO ALL LOCAL AND APPLICABLE CODES AND SPECIFIC SITE CONDITIONS. THERE IS NO WARRANTY, WHETHER IMPLIED OR EXPRESSED THAT THESE DOCUMENTS MEET THE APPLICABLE CODE REQUIREMENTS. LIABILITY FOR THE DESIGN AND ANY USE OF THE DOCUMENTS IS THE SOLE RESPONSIBILITY OF THE ARCHITECT AND ENGINEER OF RECORD.

CARIBOU COFFEE COMPANY
DRIVE-THRU ONLY STORE
DT RIGHT PROTOTYPE TENANT IMPROVEMENT
CITY, STATE

CODE REVIEW FLOOR PLAN

Caribou COFFEE
Caribou Coffee Company
3900 Lakebreeze Ave N
Brooklyn Center, MN 55429

DATE ISSUED
2023 CABIN PROTOTYPE ISSUE 03-28-23

DRAWN BY TB
CHECKED BY CE
JOB NO. 22210
PROJECT LOCATION:
CITY, STATE

A0.2
CODE REVIEW

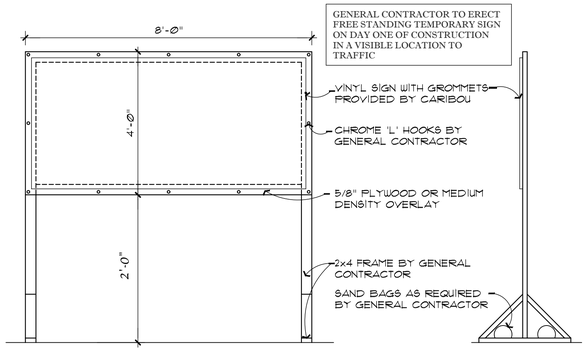

1 TEMPORARY FREE STANDING TEMPORARY SIGN
1/2"=1'-0"

RAILING COMPONENTS :
MATERIAL: POWDER COATED STEEL OR ALUMINUM
PAINT: SATIN FINISH SUPER DURABLE POWDER COATINGS (OR APPROVED EQUAL)
MANUFAC: TBD APPROVED VENDOR
COLOR: JET BLACK #038/80010
LOCATION: ALL RAILING COMPONENTS INCLUDING POST CAP

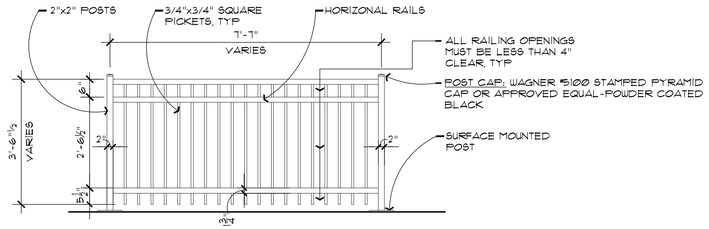

2 TYPICAL PATIO RAILING ELEVATION
1/2" = 1'-0"

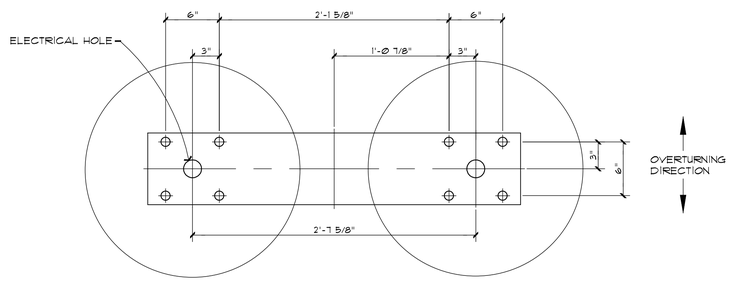

3 MENU BOARD BASE PLATE AND ANCHOR BOLT PATTERN
1 1/2"=1'-0"

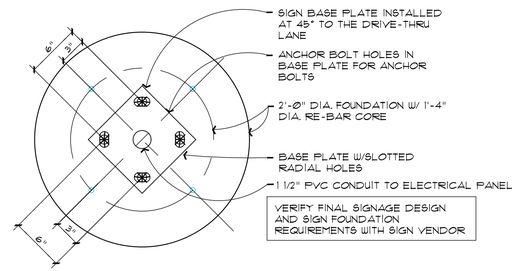

5A PREVIEW BOARD BASE PLATE AND ANCHOR BOLT PATTERN
1 1/2"=1'-0"

INSTALLATION INSTRUCTIONS:
1. STAKE FOUNDATION AREA & CONFIRM FINAL GRADE REQUIREMENTS WITH G.C.
2. EXCAVATE FOUNDATION AREA.
3. SET ANCHOR BOLTS, REBAR & CONDUIT STUB. (PRIMARY ELECTRICAL SERVICE TO BASE BY G.C.
4. POUR CONCRETE. ALLOW CONCRETE CURE TIME AS REQUIRED.
5. ANCHOR POLES AS SHOWN. CHECK FOR PLUMB.
6. MOUNT SIGNAGE TO POLE(S). (INSTALLER TO PROVIDE WIRE BETWEEN SIGN & BASE OF POLE.)
7. FINAL ELECTRICAL CONNECTION BY TENANT IMPROVEMENT G.C. (ALL ELECTRICAL TO MEET LOCAL CODES.) ALL WIRE MUST BE ENCLOSED IN CONDUIT.
8. TEST SIGNAGE FOR PROPER FUNCTION & LIGHTING.
9. REMOVE ANY LIFTING BRACKETS & REINSTALL BOLTS.
10. CLEAN UP AREA & REMOVE ANY PACKING MATERIAL. DO NOT DISCARD ANY MATERIAL OR DEBRIS INTO ON SITE DUMPSTERS.
11. INSTALL MENU INSERTS (PROVIDED BY CARIBOU)

DESIGN SPECIFICATIONS:
3000 P.S.I. CONCRETE @ 5.8 CU. YDS.

DESIGN NOTE:
SIGN, POLE AND CONCRETE BASE ARE DESIGNED TO WITHSTAND A WIND OF 21 P.S.F. CONCRETE BASE DESIGNED USING A LATERAL SOIL BEARING CAPACITY OF 150 P.S.F./FT. POUR FOUNDATION AGAINST UNDISTURBED SOIL. IF THESE SOIL CONDITIONS DO NOT EXIST AT THE FOUNDATION LOCATION, IT IS THE ERECTOR'S RESPONSIBILITY TO NOTIFY SIGN VENDOR PRIOR TO PERFORMING ADDITIONAL EXCAVATION OR ANY CONCRETE PLACEMENT.

FOUNDATION PROVIDED BY G.C.
SIGN CABINET PROVIDED BY CARIBOU
INSTALLATION BY SIGN VENDOR

VERIFY FINAL SIGNAGE DESIGN, DIMENSIONS, AND SIGN FOUNDATION REQUIREMENTS WITH SIGN VENDOR

VERIFY ELECTRICAL POWER REQUIREMENTS WITH SIGN VENDOR

REFER TO 3/A-403 FOR BASE MOUNTING PLATE

FOUNDATION NOTE:
4'-0" IS THE MINIMUM FOUNDATION DEPTH REQUIRED FOR DESIGN LOADS. DEPTH MAY NEED TO BE INCREASED BASED ON LOCAL FROST DEPTH REQUIREMENTS AND PROJECT GEOTECHNICAL REPORT.

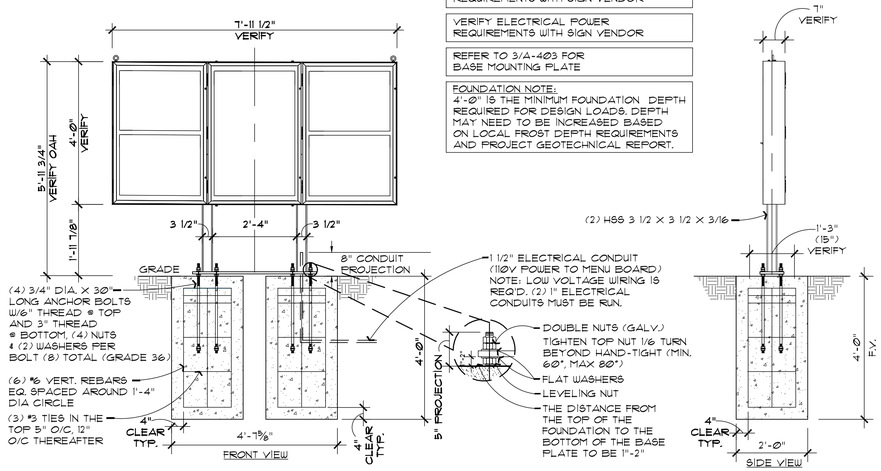

4 MENU BOARD
1/2" = 1'-0"

INSTALLATION INSTRUCTIONS:
1. STAKE FOUNDATION AREA & CONFIRM FINAL GRADE REQUIREMENTS WITH G.C.
2. EXCAVATE FOUNDATION AREA.
3. SET ANCHOR BOLTS, REBAR & CONDUIT STUB. (PRIMARY ELECTRICAL SERVICE TO BASE BY G.C.
4. POUR CONCRETE. ALLOW CONCRETE CURE TIME AS REQUIRED.
5. ANCHOR POLES AS SHOWN. CHECK FOR PLUMB.
6. MOUNT SIGNAGE TO POLE(S). (INSTALLER TO PROVIDE WIRE BETWEEN SIGN & BASE OF POLE.)
7. FINAL ELECTRICAL CONNECTION BY TENANT IMPROVEMENT G.C. (ALL ELECTRICAL TO MEET LOCAL CODES.) ALL WIRE MUST BE ENCLOSED IN CONDUIT.
8. TEST SIGNAGE FOR PROPER FUNCTION & LIGHTING.
9. REMOVE ANY LIFTING BRACKETS & REINSTALL BOLTS.
10. CLEAN UP AREA & REMOVE ANY PACKING MATERIAL. DO NOT DISCARD ANY MATERIAL OR DEBRIS INTO ON SITE DUMPSTERS.
11. INSTALL MENU INSERTS (PROVIDED BY CARIBOU)

DESIGN SPECIFICATIONS:
3000 P.S.I. CONCRETE @ 5.8 CU. YDS.

DESIGN NOTE:
SIGN, POLE AND CONCRETE BASE ARE DESIGNED TO WITHSTAND A WIND OF 21 P.S.F. CONCRETE BASE DESIGNED USING A LATERAL SOIL BEARING CAPACITY OF 150 P.S.F./FT. POUR FOUNDATION AGAINST UNDISTURBED SOIL. IF THESE SOIL CONDITIONS DO NOT EXIST AT THE FOUNDATION LOCATION, IT IS THE ERECTOR'S RESPONSIBILITY TO NOTIFY SIGN VENDOR PRIOR TO PERFORMING ADDITIONAL EXCAVATION OR ANY CONCRETE PLACEMENT.

FOUNDATION PROVIDED BY G.C.
SIGN CABINET PROVIDED BY CARIBOU
INSTALLATION BY SIGN VENDOR

VERIFY FINAL SIGNAGE DESIGN, DIMENSIONS, AND SIGN FOUNDATION REQUIREMENTS WITH SIGN VENDOR

VERIFY ELECTRICAL POWER REQUIREMENTS WITH SIGN VENDOR

FOUNDATION NOTE:
4'-0" IS THE MINIMUM FOUNDATION DEPTH REQUIRED FOR DESIGN LOADS. DEPTH MAY NEED TO BE INCREASED BASED ON LOCAL FROST DEPTH REQUIREMENTS AND PROJECT GEOTECHNICAL REPORT.

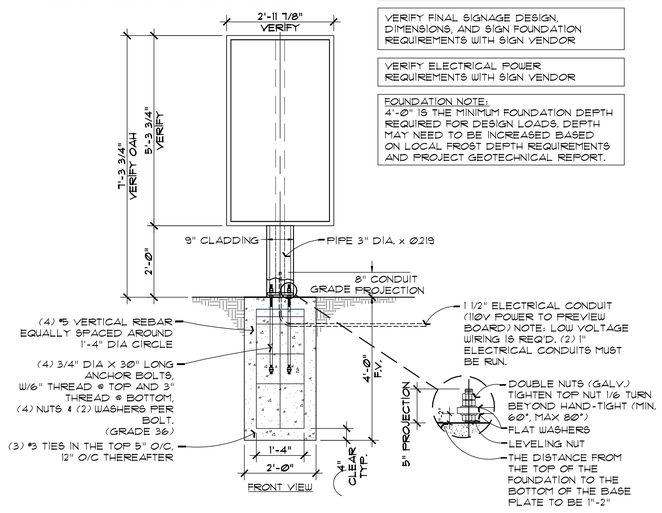

5 DRIVE THRU PREVIEW BOARD
1/2" = 1'-0"

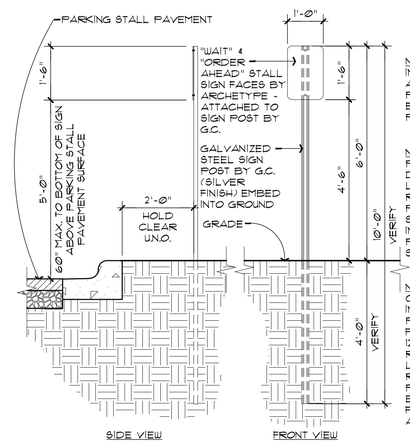

NOTE: FOR "WAIT" STALL SIGN AND SIGN INFORMATION CONTACT JENNY KRUSE WITH ARCHETYPE SIGN AT
PHONE: 952-641-9602
E-MAIL: JENNYK@ARCHETYPESIGN.COM
PROJECTMANAGER@ARCHETYPESIGN.COM

NOTE: FIELD VERIFY FINAL SIGN POST LENGTH AND EMBEDMENT DEPTH INTO GRADE PER SITE LOCATION AND RECOMMENDATIONS OF SIGN POST SUPPLIER. BOTTOM OF SIGN TO BE HELD AT 60" INCHES MAXIMUM ABOVE PARKING STALL PAVEMENT SURFACE.

NOTE: IF SIGN IS LOCATED IN A CONCRETE PAVED AREA INSTEAD OF A GRADE AREA PROVIDE CONCRETE FOOTING/FOUNDATION SUCH AS 12" DIAMETER CONCRETE TO REQUIRED DEPTH PER SITE LOCATION AND RECOMMENDATIONS OF SIGN POST SUPPLIER. PROVIDE EXPANSION JOINT BETWEEN SIGN FOOTING/FOUNDATION AND ADJACENT PAVED AREA.

6 TYP "WAIT/ORDER AHEAD" PARKING SIGN DETAIL
1/2" = 1'-0"

THESE DOCUMENTS ARE NOT FOR PERMIT OR CONSTRUCTION.

THEY MUST BE COMPLETED AND/OR MODIFIED BY A LICENSED ARCHITECT AND ENGINEERED TO CONFORM TO ALL LOCAL AND APPLICABLE CODES AND SPECIFIC SITE CONDITIONS. THERE IS NO WARRANTY, WHETHER IMPLIED OR EXPRESSED THAT THESE DOCUMENTS MEET THE APPLICABLE CODE REQUIREMENTS. LIABILITY FOR THE DESIGN AND ANY USE OF THE DOCUMENTS IS THE SOLE RESPONSIBILITY OF THE ARCHITECT AND ENGINEER OF RECORD.

CARIBOU COFFEE COMPANY
DRIVE-THRU ONLY STORE
DT RIGHT PROTOTYPE SHELL BUILDING
CITY, STATE

SITE DETAILS

Caribou COFFEE
Caribou Coffee Company
3900 Lakebreeze Ave N
Brooklyn Center, MN 55429

DATE ISSUED
2023 CABIN PROTOTYPE ISSUE 03-28-23

DRAWN BY TB
CHECKED BY CE
JOB NO. 22210
PROJECT LOCATION:
CITY, STATE

A-403