Planning/Zoning Application

Planning & Zoning Department

Submitted On:
May 12, 2025, 12:38PM EDT

Parcel Number: (Include ALL parcels)	WD-1040, WD-1041-2, WD-1041-1
Nearest property address to the project site:	**Street Address:** 2121 American Blvd **City:** De Pere **State:** WI **Zip:** 54115
Check each project type that is being applied for:	Site Plan
Current De Pere Zoning Districts:	BP-2
Existing Site Land Uses:	Business Park/Industrial
Proposed Site Land Uses:	Business Park/Industrial
Does the project comply with the Comprehensive Plan?	Yes
Has City Staff been contacted for a preapplication meeting?	Yes
Property Owner:	**First Name:** Rhett **Last Name:** Wiseman
Is the property owner's address the same as the nearest property address?	No
Property Owner's Address:	**Street Address:** 111 S Elgin Ave **City:** Tulsa **State:** OK **Zip:** 94598
Property Owner's Phone Number:	580-799-0198
Property Owner's Email Address:	rhett@oliveco.com
Is someone processing the project for the property owner as their authorized representative?	Yes
Authorized Representative's Name:	**First Name:** Steven **Last Name:** Kolar
Authorized Representative's Business Name:	Payne & Dolan, Inc

Authorized Representative's Phone Number:	9207169523
Authorized Representative's Email Address:	skolar@walbecgroup.com
Please attach a PDF copy of the site plan.	2025 05 07 Robinson Metal PH4 - Employee Parking.pdf
Would you like a basic checklist of information to include in the site plan?	No
How do you plan on paying for your application?	Online with a credit card
Total Due:	$350.00
Signature Data	First Name: Steve Last Name: Kolar Email Address: skolar@walbecgroup.com Signed at: May 12, 2025 12:35pm America/New_York
User's Session Information	IP Address: 12.148.220.197 Referrer URL:

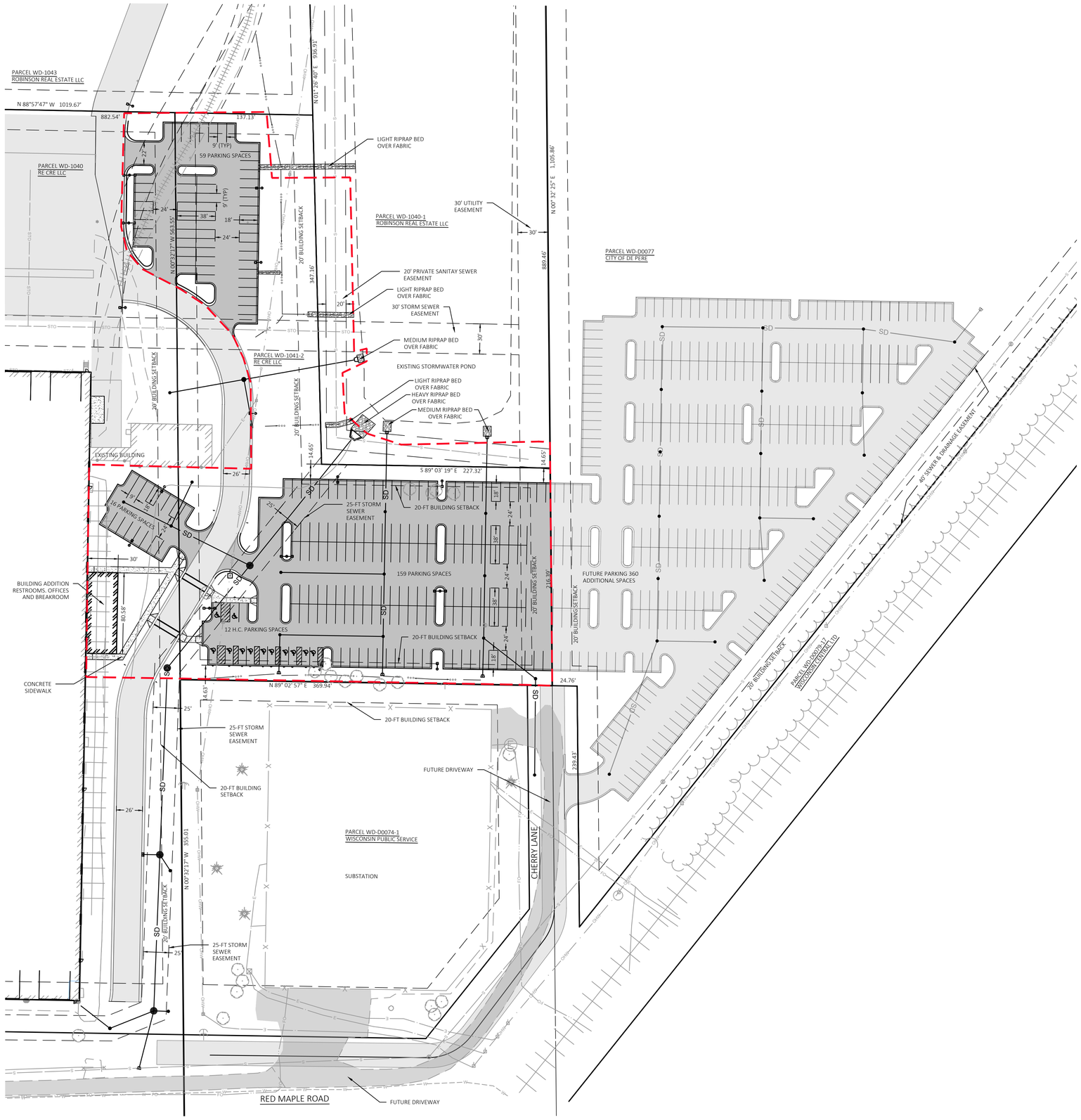

SCALE IN FEET

0 50' 100'

ISSUED FOR PERMITTING

PARCEL INFO:
PARCEL WD-1040
RE CRE LLC, ETAL
111 S ELGIN AVE
TULSA, OK 74120

PARCEL ADDRESS
2121 AMERICAN BLVD
DE PERE, WI54115

ZONING: BP-2 (BUSINESS PARK 2)

TOTAL PARKING SPACES: 594 SPACES

PROJECT AREA = 3.600 AC (156,741 SF)
EXISTING IMPERVIOUS AREA = 0.160 AC (6,983 SF)
PROPOSED IMPERVIOUS AREA = 2.000 AC (87,178 SF)
EXISTING LANDSCAPE AREA = 3.438 AC (149,758 SF)
PROPOSED LANDSCAPE AREA = 1.597 AC (69,563 SF)
INCREASED IMPERVIOUS AREA = 1.841 AC (80,195 SF)

NOTES:
DIMENSIONS ARE TO THE EDGE OF PAVEMENT OR FLANGE UNLESS OTHERWISE NOTED

PROPOSED LEGEND

- STORM INLET
- STORM MANHOLE
- SD — STORM SEWER
- CONCRETE PAVEMENT
- STANDARD ASPHALT PAVEMENT
- PROJECT LIMIT
- DRAINAGE SWALE

EXISTING LEGEND

- DS — DOWN SPOUT
- IP — FOUND, IRON PIPE
- LIGHT POLE
- FIRE HYDRANT
- INLET
- MANHOLE
- GV — GAS VALVE
- WV — WATER VALVE
- UTILITY METER
- ELECTRIC PEDESTAL
- TREE
- POWER POLE
- GUY WIRE ANCHOR
- CURB INLET
- SANITARY SEWER
- TELEPHONE PEDESTAL
- TRANSFORMER
- E — EXISTING UNDERGROUND ELECTRIC
- SS — EXISTING STORM SEWER
- SAN — EXISTING SANITARY SEWER
- W — EXISTING WATER LINE
- T — EXISTING UNDERGROUND TELEPHONE
- FO — EXISTING FIBER OPTIC
- EXISTING TREE LINE
- RIGHT OF WAY LINE
- EXISTING RAILROAD TRACKS

ROBINSON

DIGGERS HOTLINE
Toll Free (800) 242-8511
Milwaukee Area (414) 259-1181
Hearing Impaired TDD (800) 542-2289
www.DiggersHotline.com

NO	REVISION DESCRIPTION	DATE

Payne+Dolan
A WALBEC COMPANY
www.walbecgroup.com
(920) 757-7559

PROJECT
EMPLOYEE PARKING
2121 AMERICAN BLVD
DE PERE, WI

CLIENT
ROBINSON METAL, INC.
1740 EISERHOWER DRIVE
DE PERE, WI 54114

Seal
WISCONSIN
STEVEN KOLAR
E-35047
GREENVILLE, WIS.
PROFESSIONAL ENGINEER

SHEET TITLE
OVERALL DIMENSIONED SITE PLAN

COPYRIGHT NOTICE
THESE DRAWINGS AS INSTRUMENTS OF SERVICE REMAIN THE PROPERTY OF PAYNE & DOLAN, INC. ANY CHANGES, PUBLICATION, OR UNAUTHORIZED USE IS PROHIBITED UNLESS EXPRESSLY AUTHORIZED BY PAYNE & DOLAN, INC.

Drawing Scale:	1"= 50'
Drawn:	GME 05/07/2025
Checked:	SPK 05/07/2025
P&D Project No:	#490896
Sheet No.	C1

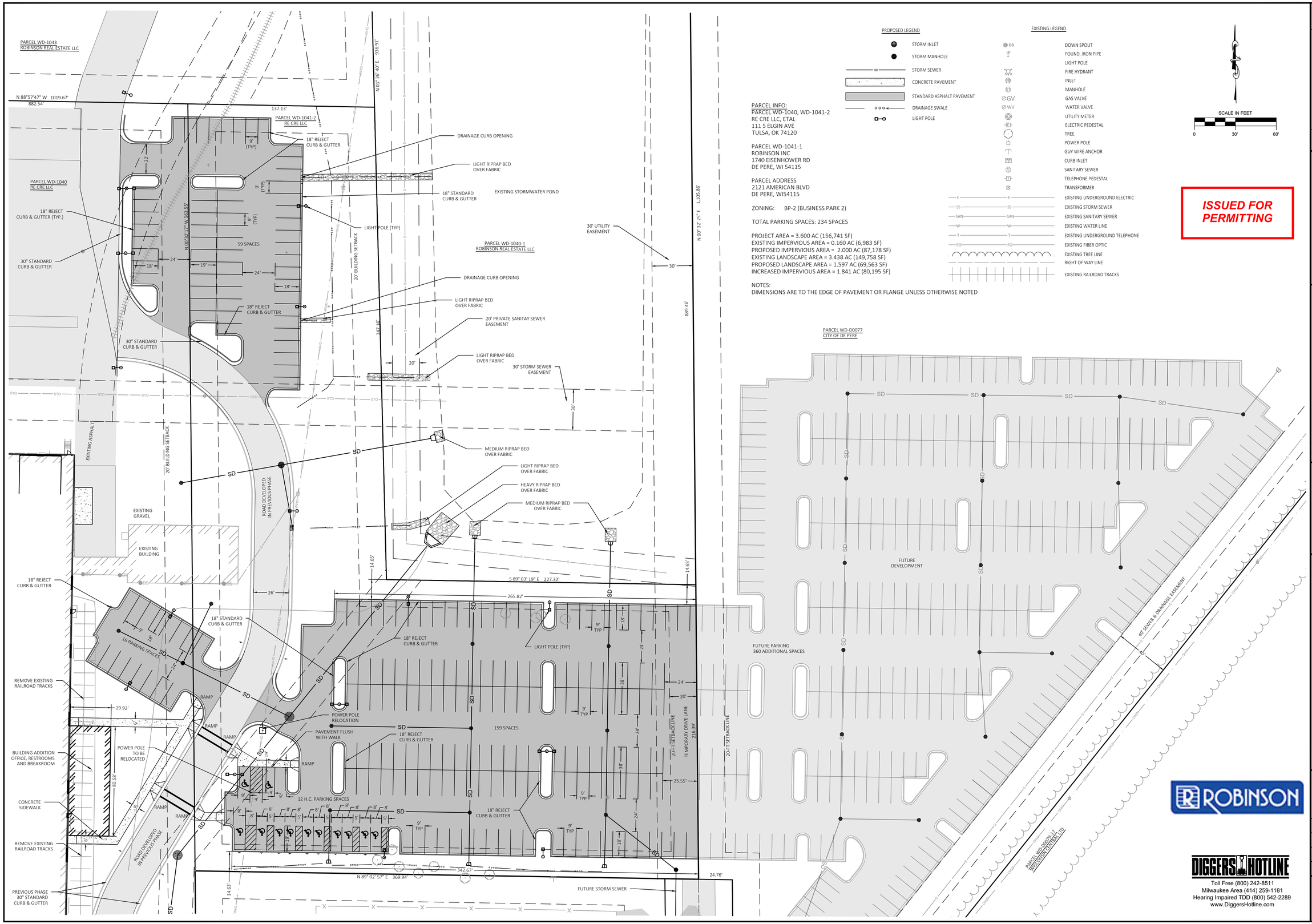

PARCEL INFO:
PARCEL WD-1040, WD-1041-2
RE CRE LLC, ETAL
111 S ELGIN AVE
TULSA, OK 74120

PARCEL WD-1041-1
ROBINSON INC
1740 EISENHOWER RD
DE PERE, WI 54115

PARCEL ADDRESS
2121 AMERICAN BLVD
DE PERE, WI54115

ZONING: BP-2 (BUSINESS PARK 2)

TOTAL PARKING SPACES: 234 SPACES

PROJECT AREA = 3.600 AC (156,741 SF)
EXISTING IMPERVIOUS AREA = 0.160 AC (6,983 SF)
PROPOSED IMPERVIOUS AREA = 2.000 AC (87,178 SF)
EXISTING LANDSCAPE AREA = 3.438 AC (149,758 SF)
PROPOSED LANDSCAPE AREA = 1.597 AC (69,563 SF)
INCREASED IMPERVIOUS AREA = 1.841 AC (80,195 SF)

NOTES:
DIMENSIONS ARE TO THE EDGE OF PAVEMENT OR FLANGE UNLESS OTHERWISE NOTED

NO.	REVISION DESCRIPTION	DATE

Payne+Dolan
A WALBEC COMPANY
www.walbecgroup.com
(920) 757-7559

PROJECT
EMPLOYEE PARKING
2121 AMERICAN BLVD
DE PERE, WI

CLIENT
ROBINSON METAL, INC.
1740 EISENHOWER DRIVE
DE PERE, WI 54114

Seal
WISCONSIN
STEVEN KOLAR
E-35047
GREENVILLE, WIS.
PROFESSIONAL ENGINEER

SHEET TITLE
DETAILED SITE PLAN

COPYRIGHT NOTICE
THESE DRAWINGS AS INSTRUMENTS OF SERVICE REMAIN THE PROPERTY OF PAYNE & DOLAN, INC. ANY CHANGES, PUBLICATION, OR UNAUTHORIZED USE IS PROHIBITED UNLESS EXPRESSLY AUTHORIZED BY PAYNE & DOLAN, INC.

Drawing Scale:	1" = 30'
Drawn:	GME 05/07/2025
Checked:	SPK 05/07/2025
P&D Project No:	#490896
Sheet No.	C2

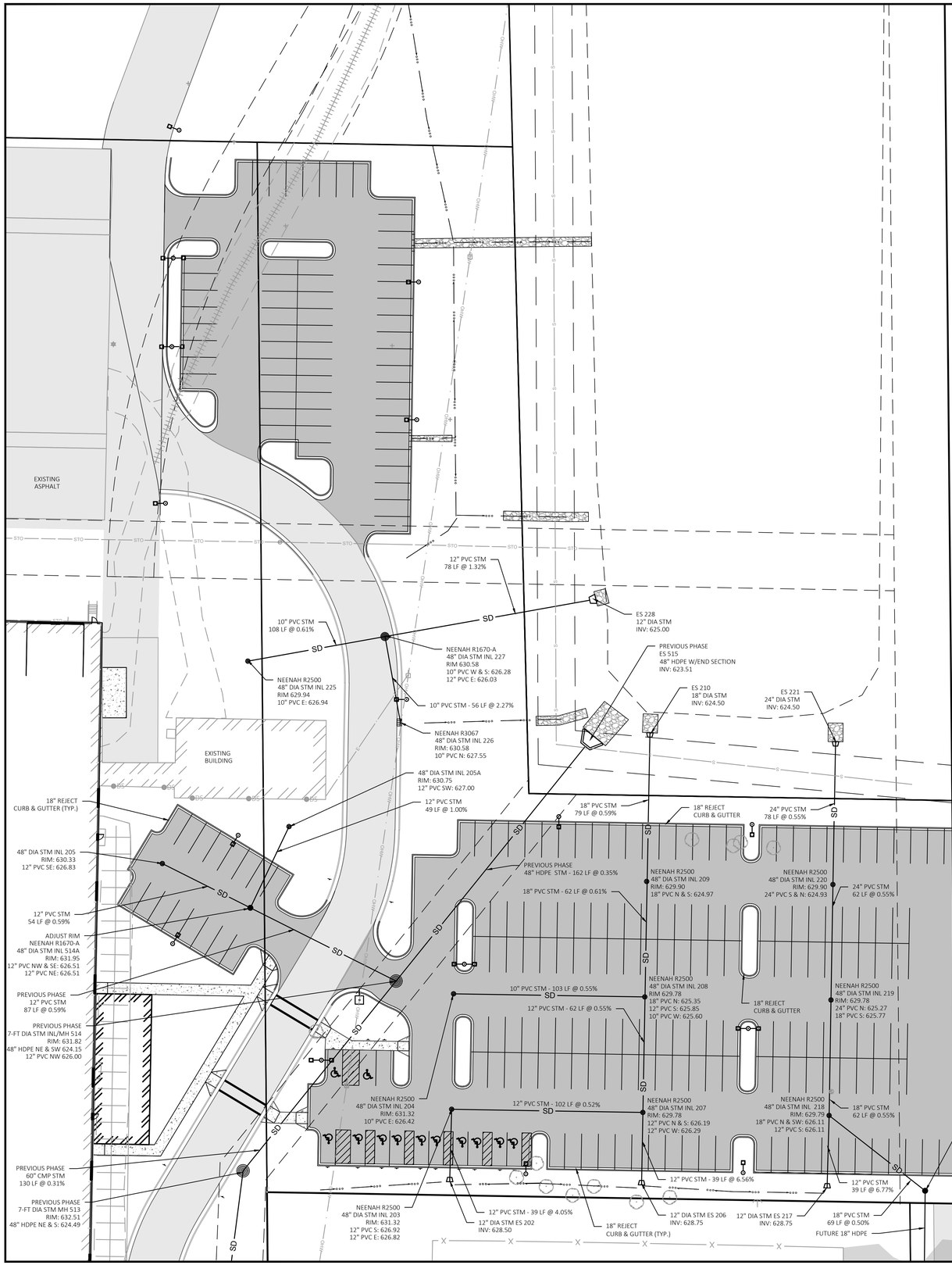

PROPOSED LEGEND

- STORM INLET
- STORM MANHOLE
- STORM SEWER
- CONCRETE PAVEMENT
- STANDARD ASPHALT PAVEMENT
- DRAINAGE SWALE
- LIGHT POLE

EXISTING LEGEND

- DOWN SPOUT
- FOUND, IRON PIPE
- LIGHT POLE
- FIRE HYDRANT
- INLET
- MANHOLE
- GAS VALVE
- WATER VALVE
- UTILITY METER
- ELECTRIC PEDESTAL
- TREE
- POWER POLE
- GUY WIRE ANCHOR
- CURB INLET
- SANITARY SEWER
- TELEPHONE PEDESTAL
- TRANSFORMER
- EXISTING UNDERGROUND ELECTRIC
- EXISTING STORM SEWER
- EXISTING SANITARY SEWER
- EXISTING WATER LINE
- EXISTING UNDERGROUND TELEPHONE
- EXISTING FIBER OPTIC
- EXISTING TREE LINE
- RIGHT OF WAY LINE
- EXISTING RAILROAD TRACKS

SCALE IN FEET

0 30' 60'

NO	REVISION DESCRIPTION	DATE

Payne+Dolan
A WALBEC COMPANY
www.walbecgroup.com
(920) 757-7559

PROJECT
EMPLOYEE PARKING
2121 AMERICAN BLVD
DE PERE, WI

CLIENT
ROBINSON METAL, INC.
1740 EISERHOWER DRIVE
DE PERE, WI 54114

Seal
WISCONSIN
STEVEN KOLAR
E-35047
GREENVILLE, WIS.
PROFESSIONAL ENGINEER

SHEET TITLE
STORM SEWER PLAN

COPYRIGHT NOTICE
THESE DRAWINGS AS INSTRUMENTS OF SERVICE REMAIN THE PROPERTY OF PAYNE & DOLAN, INC. ANY CHANGES, PUBLICATION, OR UNAUTHORIZED USE IS PROHIBITED UNLESS EXPRESSLY AUTHORIZED BY PAYNE & DOLAN, INC.

ROBINSON

DIGGERS HOTLINE
Toll Free (800) 242-8511
Milwaukee Area (414) 259-1181
Hearing Impaired TDD (800) 542-2289
www.DiggersHotline.com

Drawing Scale:	1"= 30'
Drawn:	GME 05/07/2025
Checked:	SPK 05/07/2025
P&D Project No:	#490896
Sheet No.	C3

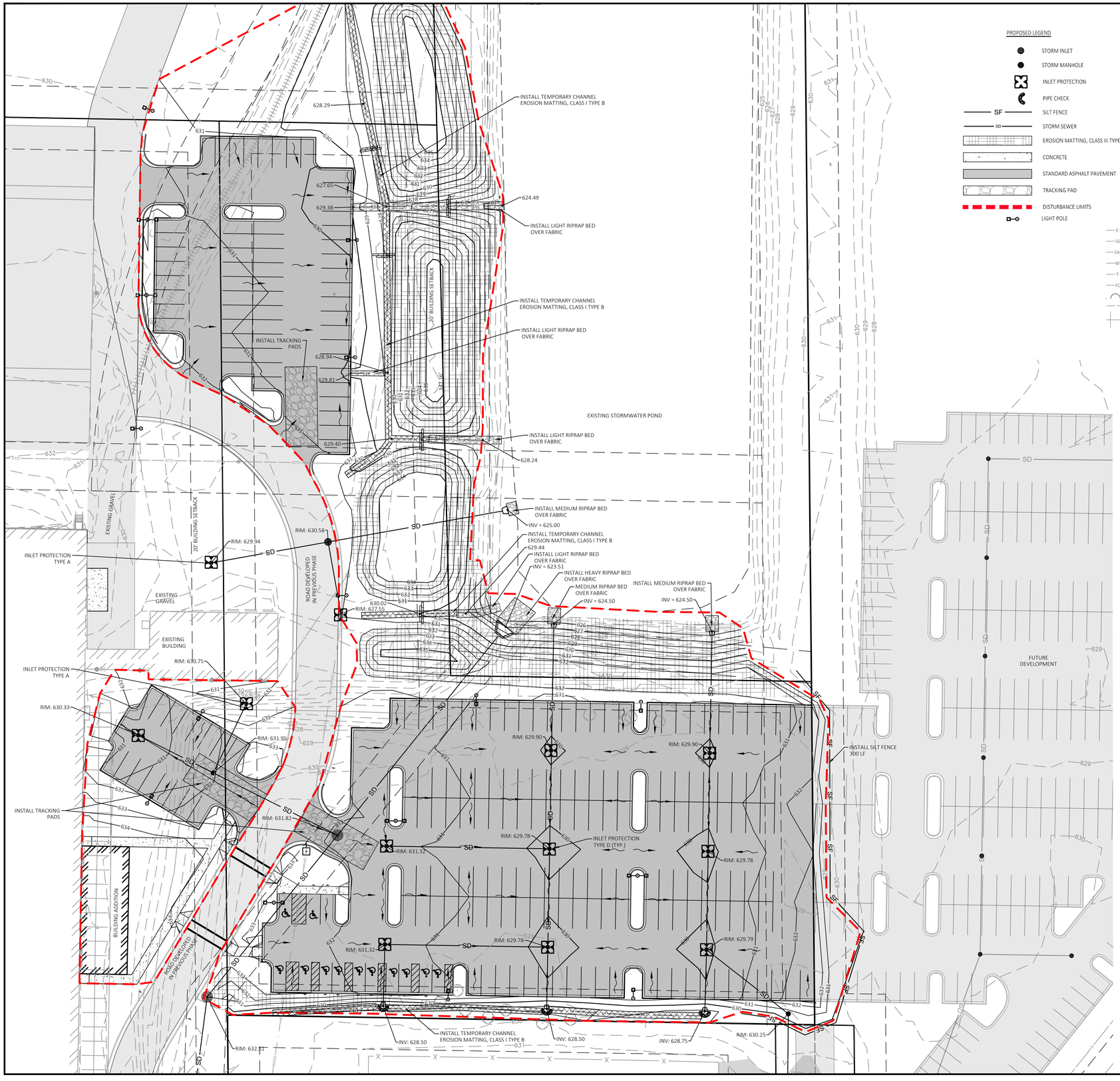

PROPOSED LEGEND

- STORM INLET
- STORM MANHOLE
- INLET PROTECTION
- PIPE CHECK
- SF — SILT FENCE
- SD — STORM SEWER
- EROSION MATTING, CLASS III TYPE B
- CONCRETE
- STANDARD ASPHALT PAVEMENT
- TRACKING PAD
- DISTURBANCE LIMITS
- LIGHT POLE

EXISTING LEGEND

- DS — DOWN SPOUT
- IP — FOUND, IRON PIPE
- FIRE HYDRANT
- INLET
- ST — MANHOLE
- GV — GAS VALVE
- WV — WATER VALVE
- UTILITY METER
- ELECTRIC PEDESTAL
- TREE
- POWER POLE
- GUY WIRE ANCHOR
- CURB INLET
- SANITARY SEWER
- TELEPHONE PEDESTAL
- TRANSFORMER
- E — EXISTING UNDERGROUND ELECTRIC
- SS — EXISTING STORM SEWER
- SAN — EXISTING SANITARY SEWER
- W — EXISTING WATER LINE
- T — EXISTING UNDERGROUND TELEPHONE
- FO — EXISTING FIBER OPTIC
- EXISTING TREE LINE
- RIGHT OF WAY LINE
- EXISTING RAILROAD TRACKS

SCALE IN FEET

0 30' 60'

EROSION CONTROL NOTES

THE FOLLOWING EROSION AND POLLUTANT CONTROL MEASURES ARE TO BE IMPLEMENTED ON THIS SITE AND MAINTAINED BY THE CONTRACTOR UNTIL SUCH TIME THAT THE SITE IS STABILIZED.

- SUBSOILS ARE CLASSIFIED AS, OSHKOSH SILT LOAM AND KEWAUNEE SILT LOAM, PER THE USDA-NRCS SOIL SURVEY.
- IMMEDIATE RECEIVING WATERS, STORMWATER POND AND UN-NAMED CHANNEL TO THE FOX RIVER.

EROSION CONTROL MEASURES:

1. VEHICLE TRACKING MATS SHALL BE INSTALLED AT ALL CONSTRUCTION ENTRANCES PER WDNR TECHNICAL STANDARD 1057 REQUIREMENT.
2. STORM DRAIN INLET PROTECTION SHALL BE INSTALLED AND MAINTAINED PER WDNR TECHNICAL STANDARD 1060.
3. SILT FENCE PERIMETER CONTROL, IF USED WILL BE INSTALLED PER WDNR TECHNICAL STANDARD 1056.
4. DITCH CHECK TO BE CONSTRUCTED PER WDNR TECHNICAL STANDARD 1062. sTONE DITCH CHECKS SHALL BE INSTALLED. STONE DITCH CHECKS TO BE REMOVED AFTER SITE VEGITATION IS STABILIZED.
5. EROSION MATTING WILL BE INSTALLED PER WDNR TECHNICAL STANDARDS 1052 FOR NON-CHANNEL MATTING AND 1053 FOR CHANNEL MATTING.
6. CONTRACTOR SHALL BE RESPONSIBLE TO PROMPTLY CLEAN UP ALL SEDIMENT DEPOSITS THAT OCCUR OFF SITE BY THE END OF EACH WORKDAY.
7. CONTRACTOR IS RESPONSIBLE FOR MAINTAINING ALL EROSION CONTROL MEASURES UNTIL THE SITE HAS BEEN STABILIZED. CONTRACTOR SHALL INSPECT ALL EROSION CONTROL MEASURES AT LEAST ONCE PER WEEK AND AFTER EACH RAINFALL EVENT OF ½ INCH OR MORE. CONTRACTOR SHALL KEEP A LOGBOOK OF ALL INSPECTION REPORTS ONSITE ALONG WITH ALL PERMITS THAT ARE REQUIRED FOR THE PROJECT. THE EROSION CONTROL PLAN SHALL BE KEPT ON SITE AT ALL TIMES DURING CONSTRUCTION.
8. DRAINAGE WAYS ARE TO BE SEEDED AND MULCHED OR SODDED OR CHANNEL EROSION MATTING INSTALLED AS SOON AS POSSIBLE. SIDE SLOPES OF DRAINAGE WAYS THAT ARE SLOPED 4:1 OR GREATER AND FLOW LINES OF THE DRAINAGE WAYS SHALL HAVE EROSION FABRIC OR MATTING INSTALLED TO PROTECT FROM EROSION. LIGHT DUTY WISDOT CLASS I URBAN TYPE A MAT IS RECOMMENDED FOR THE SLOPED AREAS AND TYPE B CLASS II FOR THE FLOW LINE OF THE SWALES. DITCH CHECKS SHALL BE INSTALLED AS INDICATED ON THE GRADING AND EROSION CONTROL PLAN.
9. ALL AREAS OF BARE SOIL LEFT INACTIVE FOR MORE THAN 7 DAYS SHALL BE SEEDED WITH A FAST GROWING ANNUAL GRASS (TEMPORARY) SUCH AS OATS AND RYE AND MULCHED.
10. DEWATERING IS NOT ANTICIPATED. IF DEWATERING IS NECESSARY IT SHALL FOLLOW THE REQUIREMENTS OF WDNR TECHNICAL STANDARD 1061.
11. DUST CONTROL MEASURES FOR CONSTRUCTION ACTIVITIES SHALL INCLUDE MINIMIZATION OF SOIL DISTURBANCE, APPLYING MULCH AND ESTABLISHING VEGETATION, WATER SPRAYING, SURFACE ROUGHENING, APPLYING POLYMERS, SPRAY-ON TACKIFIERS, CHLORIDES AND BARRIERS. THESE MEASURES SHALL BE APPLIED AS APPLICABLE TO THE SITE CONDITIONS AND SHALL FOLLOW THE REQUIREMENTS OF WDNR TECHNICAL STANDARD 1068.
12. CONTRACTOR SHALL HAVE A DESIGNATED AREA FOR TRASH AND PROMPTLY DISPOSE OF ALL WASTE MATERIAL.
13. ANY SPILL THAT MAY OCCUR SHALL BE PROMPTLY CLEANED UP PER LOCAL AND STATE REQUIREMENTS.

NARRATIVE AND CONSTRUCTION SEQUENCE PHASE 4

ROBINSON INC. IS CONSTRUCTING A NEW PAVED DRIVEWAY ALONG THE EAST SIDE OF THE BUILDING AND A GRAVEL ACCESS DRIVEWAY AND GRAVEL LOADING DOCK ACCESS AREA ALONG THE SOUTH SIDE OF THE BUILDING. CONSTRUCTION INCLUDES GRADING, STORM SEWER, CURB AND GUTTER AND RESTORATION OF ALL DISTURBED AREAS. .

ESTIMATED CONSTRUCTION TIMEFRAMES*:

INSTALL EROSION CONTROL MEASURES = AUGUST, 2025

EXCAVATION AND CONSTRUCTION OF STORM SEWER AND DRIVEWAY = AUGUST - OCTOBER 2025

LANDSCAPING AND FINAL RESTORATION = OCTOBER 2025

THE INTENDED SEQUENCES OF SITE CONSTRUCTION ACTIVITIES ARE AS FOLLOWS:

1. INSTALL EROSION CONTROL MEASURES AS INDICATED ON THE EROSION CONTROL PLAN AND IN ACCORDANCE WITH THE REQUIREMENTS OF WNDR CONSERVATION PRACTICE STANDARDS.
2. STRIP TOPSOIL AND REMOVE VEGETATION.
3. INSTALL STORM SEWER IN PARKING LOT AREA AND DAYLIGHT TO THE EXISTING STORMWATER POND
4. . FINE GRADE AND INSTALL PAVEMENT.
5. LANDSCAPING AND FINAL RESTORATION.
6. WHEN THE SITE VEGETATION HAS BEEN ESTABLISHED AND THE POTENTIAL OF EROSION IS STABILIZED, THE TEMPORARY EROSION CONTROL MEASURE WILL BE REMOVED.

*CONSTRUCTION ACTIVITY DATES ARE APPROXIMATE AND MAY CHANGE DUE TO WEATHER OR OTHER UNFORESEEN REASONS.

ROBINSON

DIGGERS HOTLINE
Toll Free (800) 242-8511
Milwaukee Area (414) 259-1181
Hearing Impaired TDD (800) 542-2289
www.DiggersHotline.com

NO.	REVISION DESCRIPTION	DATE

Payne+Dolan
A WALBEC COMPANY
www.walbec-group.com
(920) 757-7559

PROJECT
EMPLOYEE PARKING
2121 AMERICAN BLVD
DE PERE, WI

CLIENT
ROBINSON METAL, INC.
1740 EISENHOWER DRIVE
DE PERE, WI 54114

Seal

WISCONSIN
STEVEN KOLAR
E-35047
GREENVILLE, WIS.
PROFESSIONAL ENGINEER

SHEET TITLE
OVERALL GRADING & EROSION CONTROL PLAN PHASE 4

COPYRIGHT NOTICE
THESE DRAWINGS AS INSTRUMENTS OF SERVICE REMAIN THE PROPERTY OF PAYNE & DOLAN, INC. ANY CHANGES, PUBLICATION, OR UNAUTHORIZED USE IS PROHIBITED UNLESS EXPRESSLY AUTHORIZED BY PAYNE & DOLAN, INC.

Drawing Scale:	1"= 30'
Drawn:	GME 05/07/2025
Checked:	SPK 05/07/2025
P&D Project No:	#490896
Sheet No.	C4

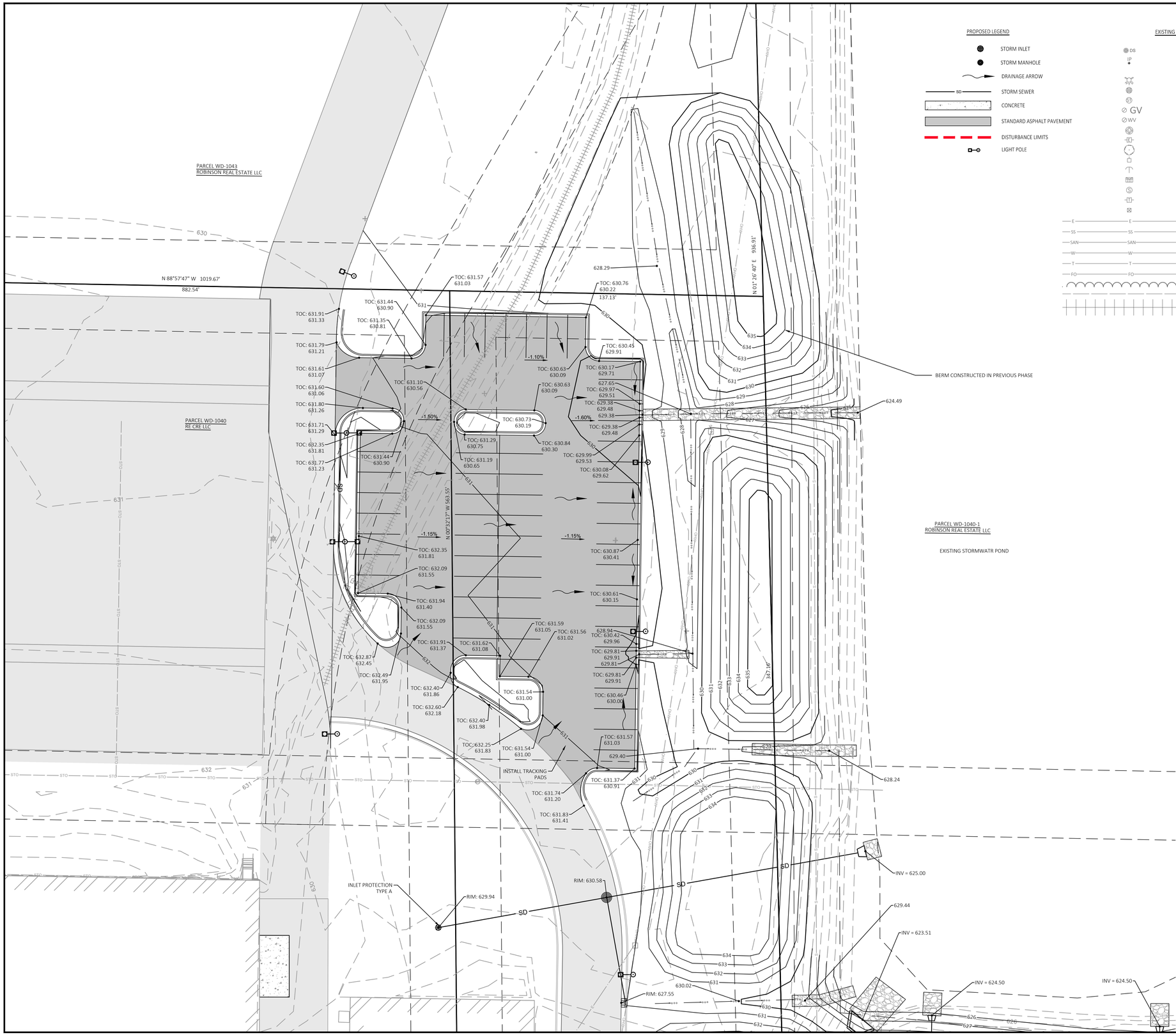

PROPOSED LEGEND

- STORM INLET
- STORM MANHOLE
- DRAINAGE ARROW
- STORM SEWER
- CONCRETE
- STANDARD ASPHALT PAVEMENT
- DISTURBANCE LIMITS
- LIGHT POLE

EXISTING LEGEND

- DOWN SPOUT
- FOUND, IRON PIPE
- FIRE HYDRANT
- INLET
- MANHOLE
- GAS VALVE
- WATER VALVE
- UTILITY METER
- ELECTRIC PEDESTAL
- TREE
- POWER POLE
- GUY WIRE ANCHOR
- CURB INLET
- SANITARY SEWER
- TELEPHONE PEDESTAL
- TRANSFORMER
- EXISTING UNDERGROUND ELECTRIC
- EXISTING STORM SEWER
- EXISTING SANITARY SEWER
- EXISTING WATER LINE
- EXISTING UNDERGROUND TELEPHONE
- EXISTING FIBER OPTIC
- EXISTING TREE LINE
- RIGHT OF WAY LINE
- EXISTING RAILROAD TRACKS

SCALE IN FEET

0 20' 40'

NO.	REVISION DESCRIPTION	DATE

Payne+Dolan
A WALBEC COMPANY
www.walbec-group.com
(920) 757-7559

PROJECT
EMPLOYEE PARKING
2121 AMERICAN BLVD
DE PERE, WI

CLIENT
ROBINSON METAL, INC.
1740 EISERHOWER DRIVE
DE PERE, WI 54114

Seal

WISCONSIN
STEVEN KOLAR
E-35047
GREENVILLE, WIS.
PROFESSIONAL ENGINEER

SHEET TITLE
DETAILED GRADING PLAN
1 OF 2

COPYRIGHT NOTICE
THESE DRAWINGS AS INSTRUMENTS OF SERVICE REMAIN THE PROPERTY OF PAYNE & DOLAN, INC. ANY CHANGES, PUBLICATION, OR UNAUTHORIZED USE IS PROHIBITED UNLESS EXPRESSLY AUTHORIZED BY PAYNE & DOLAN, INC.

Drawing Scale:	1" = 20'
Drawn:	GME 05/07/2025
Checked:	SPK 05/07/2025
P&D Project No:	#490896
Sheet No.	C5

ROBINSON

DIGGERS HOTLINE
Toll Free (800) 242-8511
Milwaukee Area (414) 259-1181
Hearing Impaired TDD (800) 542-2289
www.DiggersHotline.com

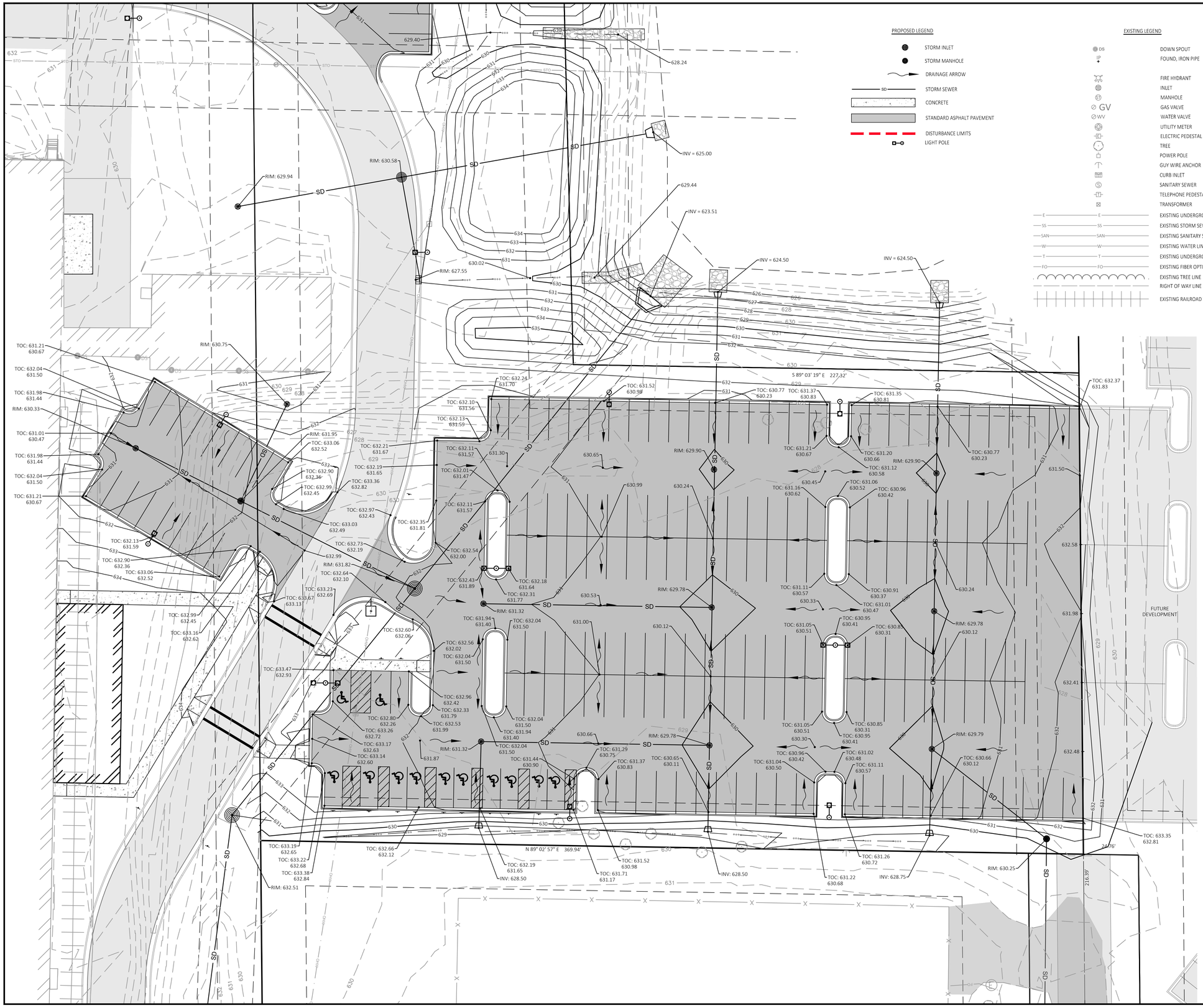

DATE
REVISION DESCRIPTION
NO.

Payne+Dolan
A WALBEC COMPANY
www.walbecgroup.com
(920) 757-7559

PROJECT
EMPLOYEE PARKING
2121 AMERICAN BLVD
DE PERE, WI

CLIENT
ROBINSON METAL, INC.
1740 EISERHOWER DRIVE
DE PERE, WI 54114

Seal
WISCONSIN
STEVEN KOLAR
E-35047
GREENVILLE, WIS.
PROFESSIONAL ENGINEER

SHEET TITLE
DETAILED GRADING PLAN
2 OF 2

COPYRIGHT NOTICE
THESE DRAWINGS AS INSTRUMENTS OF SERVICE REMAIN THE PROPERTY OF PAYNE & DOLAN, INC. ANY CHANGES, PUBLICATION, OR UNAUTHORIZED USE IS PROHIBITED UNLESS EXPRESSLY AUTHORIZED BY PAYNE & DOLAN, INC.

Drawing Scale:	1"= 20'
Drawn:	GME 05/07/2025
Checked:	SPK 05/07/2025
P&D Project No:	#490896
Sheet No.	C6

ROBINSON

DIGGERS HOTLINE
Toll Free (800) 242-8511
Milwaukee Area (414) 259-1181
Hearing Impaired TDD (800) 542-2289
www.DiggersHotline.com

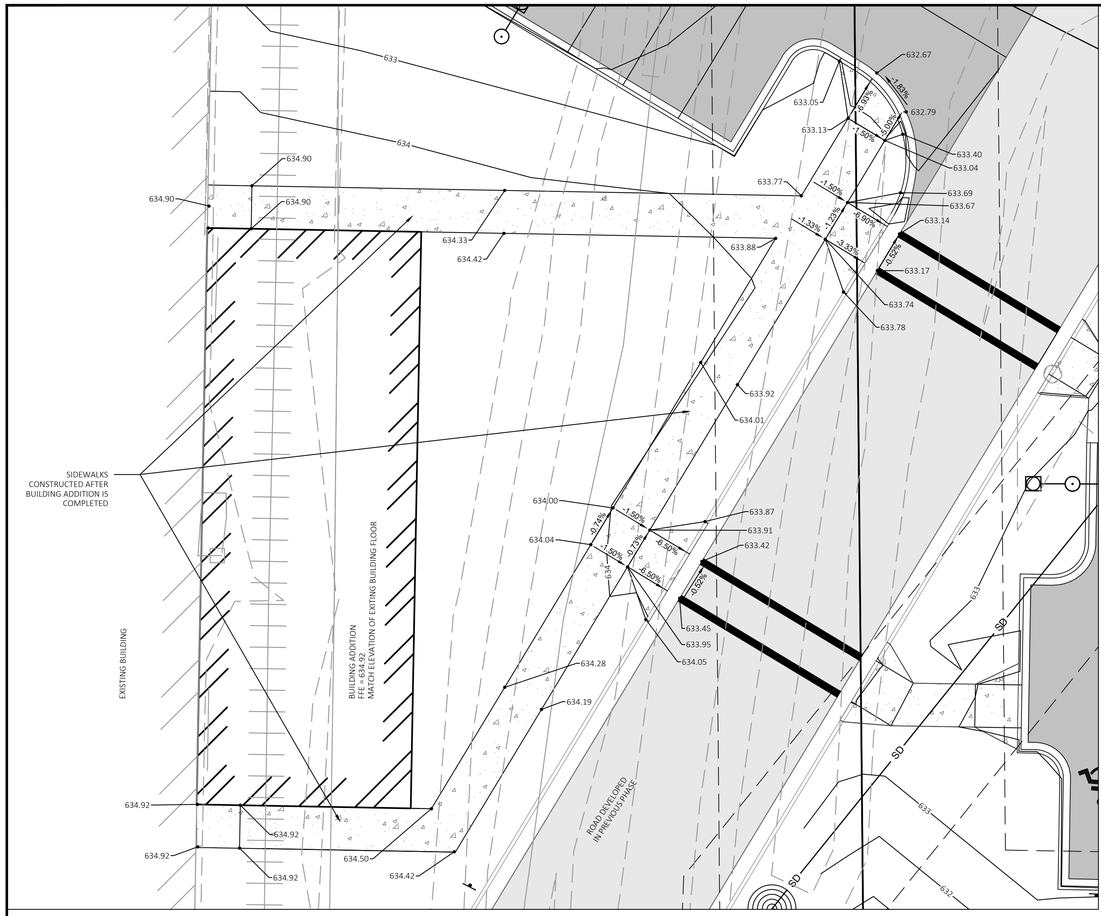

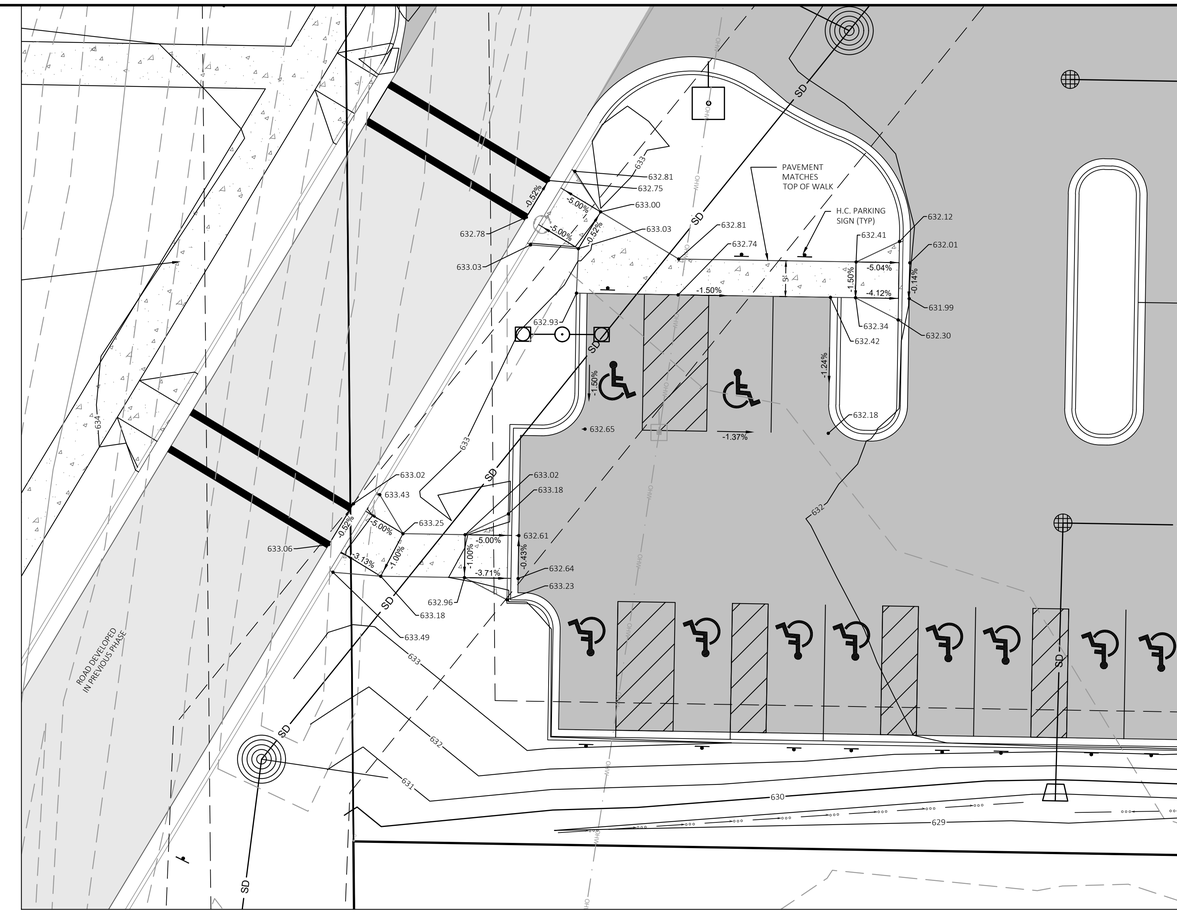

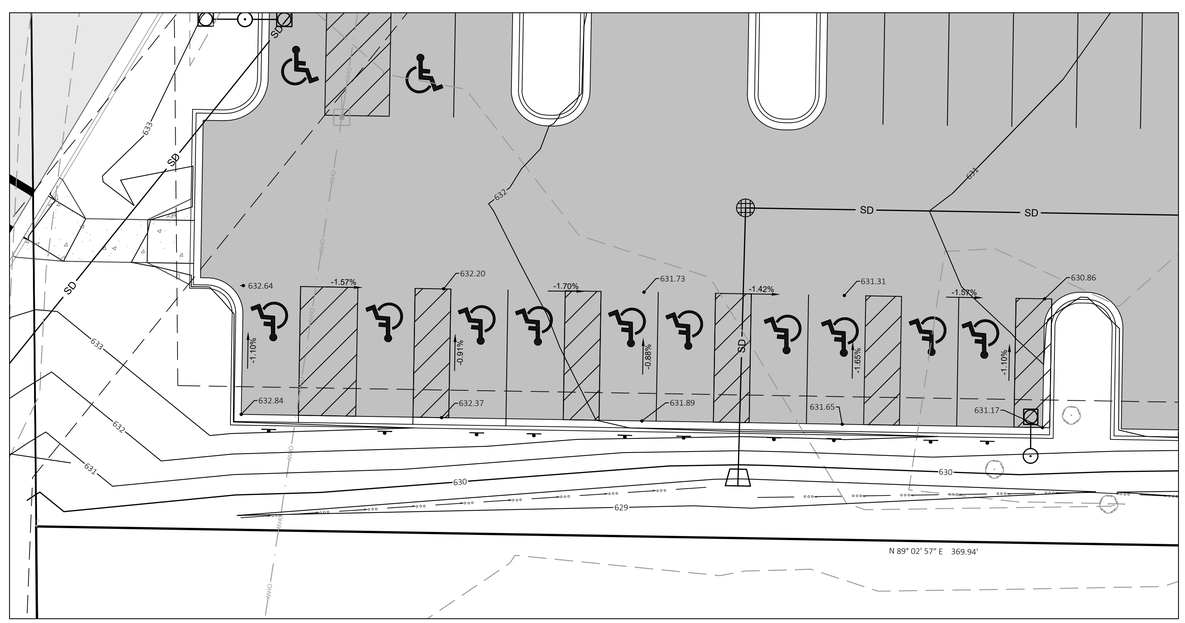

SCALE IN FEET
0 10' 20'

ROBINSON

DIGGERS HOTLINE
Toll Free (800) 242-8511
Milwaukee Area (414) 259-1181
Hearing Impaired TDD (800) 542-2289
www.DiggersHotline.com

NO:	REVISION DESCRIPTION:	DATE:

Payne+Dolan
A WALBEC COMPANY
www.walbecgroup.com
(920) 757-7559

PROJECT
EMPLOYEE PARKING
2121 AMERICAN BLVD
DE PERE, WI

CLIENT
ROBINSON METAL, INC.
1740 EISERHOWER DRIVE
DE PERE, WI 54114

Seal
WISCONSIN
STEVEN KOLAR
E-35047
GREENVILLE, WIS.
PROFESSIONAL ENGINEER

SHEET TITLE
SIDEWALK AND HANDICAP GRADING DETAILS

COPYRIGHT NOTICE
THESE DRAWINGS AS INSTRUMENTS OF SERVICE REMAIN THE PROPERTY OF PAYNE & DOLAN, INC. ANY CHANGES, PUBLICATION, OR UNAUTHORIZED USE IS PROHIBITED UNLESS EXPRESSLY AUTHORIZED BY PAYNE & DOLAN, INC.

Drawing Scale:	1"= 30'
Drawn:	GME 05/07/2025
Checked:	SPK 05/07/2025
P&D Project No:	#490896
Sheet No.	C7

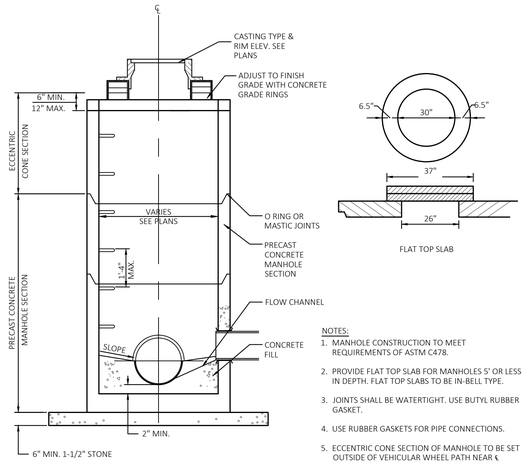

NOTES:
1. MANHOLE CONSTRUCTION TO MEET REQUIREMENTS OF ASTM C478.
2. PROVIDE FLAT TOP SLAB FOR MANHOLES 5' OR LESS IN DEPTH. FLAT TOP SLABS TO BE IN-BELL TYPE.
3. JOINTS SHALL BE WATERTIGHT. USE BUTYL RUBBER GASKET.
4. USE RUBBER GASKETS FOR PIPE CONNECTIONS.
5. ECCENTRIC CONE SECTION OF MANHOLE TO BE SET OUTSIDE OF VEHICULAR WHEEL PATH NEAR ℄ ROADWAY.

STORM MANHOLE OR INLET

N.T.S.

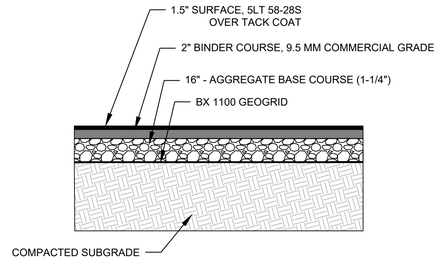

STANDARD HMA PAVEMENT SECTION

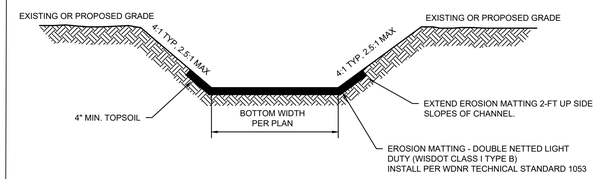

GRASS CHANNEL

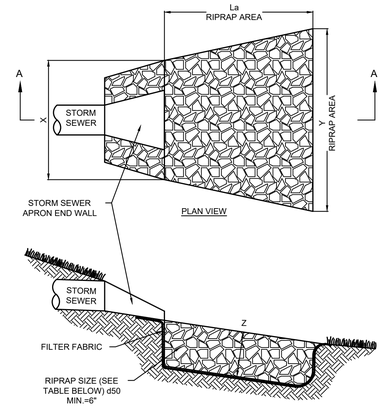

SECTION A-A

DIMENSIONS

OUTLET	La	X	Y	SIZE	Z
ES 210	10'	4'	6'	MEDIUM	18"
ES 221	10'	4'	6'	MEDIUM	18"
ES 228	10'	3'	3'	MEDIUM	18"
ES515	12'	6'	12'	HEAVY	24"

RIPRAP SHALL COMPLY WITH THE SECTION 606 OF THE STATE OF WISCONSIN STANDARD FOR HIGHWAY AND STRUCTURE CONSTRUCTION.

RIPRAP BED AT APRON ENDWALL

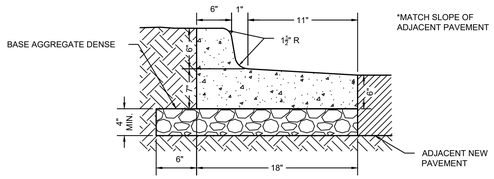

NOTES:
4000 PSI CONCRETE SHALL BE USED IN CONSTRUCTION OF THE CURB & GUTTER 1/2" PREFORMED EXPANSION JOINT FILLER SHALL BE PLACED TRANSVERSELY IN THE CURB AS FOLLOWS:
1) AT EACH JUNCTION OF RADIUS RETURN CURB AND THE CURB WHICH IS PARALLEL TO THE PROJECT CENTER LINE.
2) AT EACH JUNCTION WITH EXISTING CONCRETE CURB OR CONCRETE CURB & GUTTER.
3) AT EACH JUNCTION WITH EXISTING CONCRETE SIDEWALK, TO THE DEPTH OF THE SIDEWALK.

18-INCH REJECT CONCRETE CURB & GUTTER DETAIL

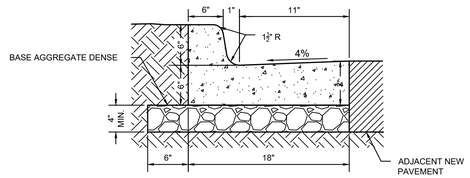

NOTES:
4000 PSI CONCRETE SHALL BE USED IN CONSTRUCTION OF THE CURB & GUTTER.
1/2" PREFORMED EXPANSION JOINT FILLER SHALL BE PLACED TRANSVERSELY IN THE CURB AS FOLLOWS:
1) AT EACH JUNCTION OF RADIUS RETURN CURB AND THE CURB WHICH IS PARALLEL TO THE PROJECT CENTER LINE.
2) AT EACH JUNCTION WITH EXISTING CONCRETE CURB OR CONCRETE CURB & GUTTER.
3) AT EACH JUNCTION WITH EXISTING CONCRETE SIDEWALK, TO THE DEPTH OF THE SIDEWALK.

18-INCH STANDARD CONCRETE CURB & GUTTER DETAIL

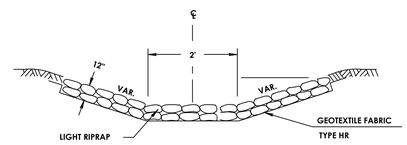

RIPRAP LINED CHANNEL (LIGHT RIPRAP)

1056-TS-12

Figure 5: Silt Fence Installation

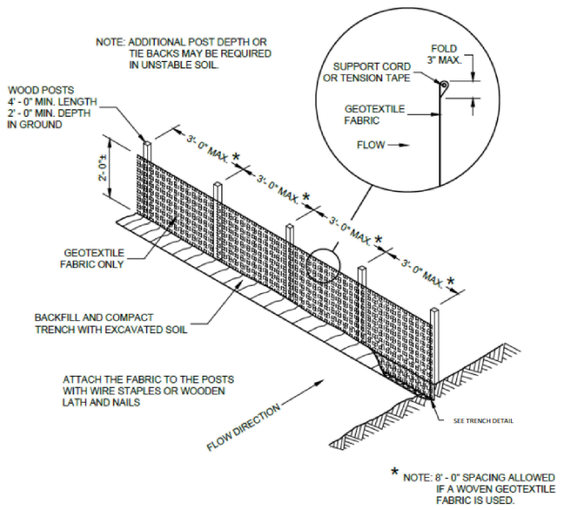

* NOTE: 8' - 0" SPACING ALLOWED IF A WOVEN GEOTEXTILE FABRIC IS USED.

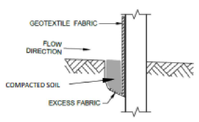

TRENCH DETAIL

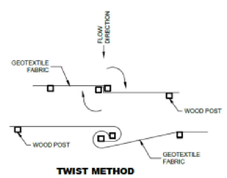

TWIST METHOD

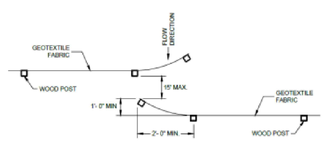

HOOK METHOD

JOINING TWO LENGTHS OF SILT FENCE

FIGURE 3. INLET PROTECTION TYPE D-M

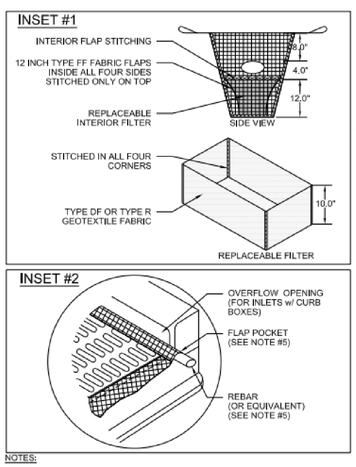

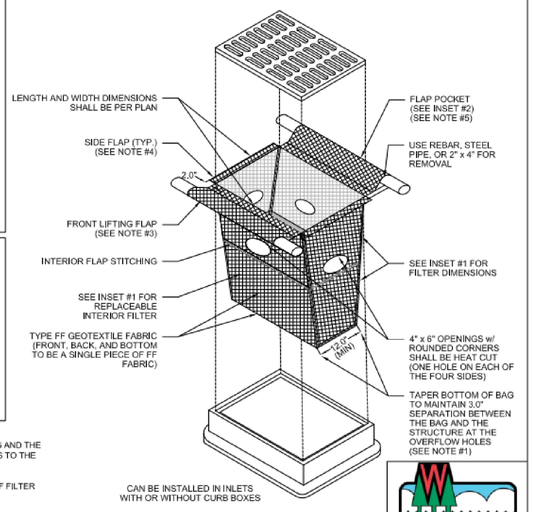

NOTES:
1. TAPER BOTTOM OF BAG TO MAINTAIN 3" OF CLEARANCE BETWEEN THE BAG AND THE STRUCTURE, MEASURED FROM THE BOTTOM OF THE OVERFLOW OPENINGS TO THE STRUCTURE WALL.
2. GEOTEXTILE FABRIC TYPE FF FOR FLAPS, TOP AND BOTTOM OF OUTSIDE OF FILTER BAG. FRONT, BACK, AND BOTTOM OF FILTER BAG BEING ONE PIECE.
3. FRONT LIFTING FLAP IS TO BE USED WHEN REMOVING AND MAINTAINING FILTER BAG.
4. SIDE FLAPS SHALL BE A MAXIMUM OF 2" LONG. FOLD THE FABRIC OVER AND REINFORCE WITH MULTIPLE STITCHES.
5. FLAP POCKETS SHALL BE LARGE ENOUGH TO ACCEPT WOOD 2" x 4". THE REBAR, STEEL PIPE, OR WOOD SHALL BE INSTALLED IN THE REAR FLAP AND SHALL NOT BLOCK THE TOP HALF OF THE CURB FACE OPENING.

MAINTENANCE NOTES:
1. WHEN REMOVING OR MAINTAINING INLET PROTECTION, CARE SHALL BE TAKEN SO THAT THE SEDIMENT TRAPPED IN THE FABRIC DOES NOT FALL INTO THE STRUCTURE. MATERIAL THAT HAS FALLEN INTO THE STRUCTURE SHALL BE IMMEDIATELY REMOVED.

WISCONSIN DEPT. OF NATURAL RESOURCES

1060	
TECHNICAL STANDARD No.	
12/2021	
REVISION DATE	
NOT TO SCALE	

ROBINSON

DIGGERS HOTLINE
Toll Free (800) 242-8511
Milwaukee Area (414) 259-1181
Hearing Impaired TDD (800) 542-2289
www.DiggersHotline.com

NO.	REVISION DESCRIPTION	DATE

Payne+Dolan
A WALBEC COMPANY
www.walbecgroup.com
(920) 757-7559
W 6380 DESIGN DRIVE
GREENVILLE, WI 54942

PROJECT
EMPLOYEE PARKING
2121 AMERICAN BLVD
DE PERE, WI

CLIENT
ROBINSON METAL, INC.
1740 EISERHOWER DRIVE
DE PERE, WI 54114

Seal

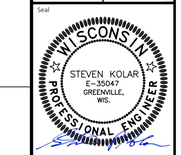

SHEET TITLE
CONSTRUCTION DETAILS

COPYRIGHT NOTICE
THESE DRAWINGS AS INSTRUMENTS OF SERVICE REMAIN THE PROPERTY OF PAYNE & DOLAN, INC. ANY CHANGES, PUBLICATION, OR UNAUTHORIZED USE IS PROHIBITED UNLESS EXPRESSLY AUTHORIZED BY PAYNE & DOLAN, INC.

Drawing Scale:

Drawn: GME 05/07/2025

Checked: SPK 05/07/2025

P&D Project No: #490896

Sheet No.
C8

Stone tracking pad detail

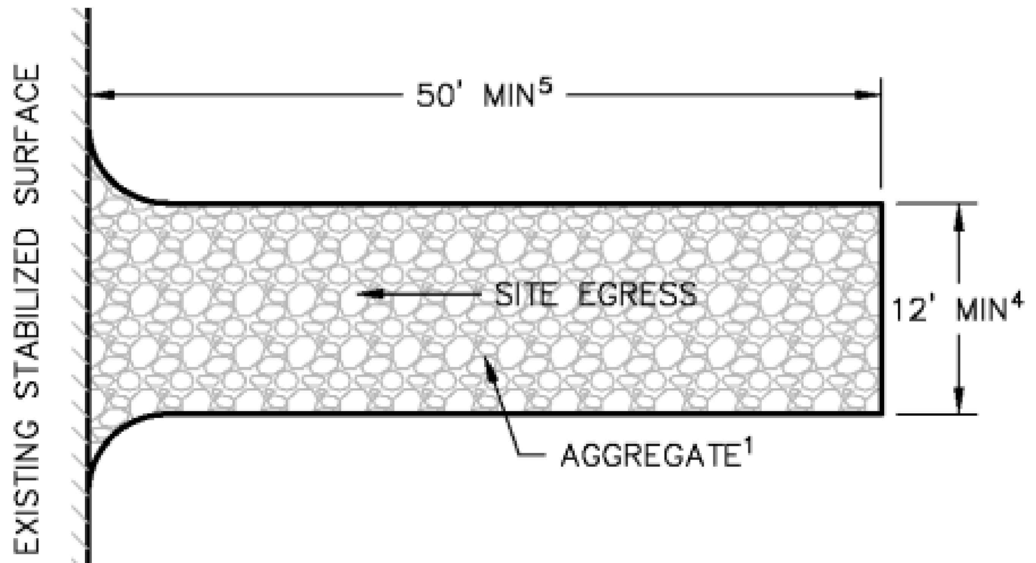

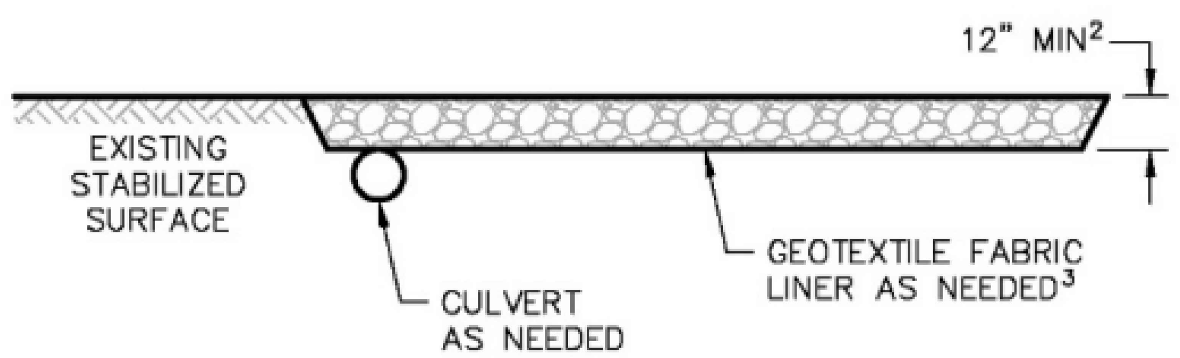

Note 1 Use hard, durable, angular stone or recycled concrete meeting the gradation in Table 1. Where this gradation is not available, meet the gradation in Wisconsin Department of Transportation (DOT) 2018 Standard Specification, Section 312, Select Crushed Material.

Note 2 Slope the stone tracking pad in a manner to direct runoff to an approved treatment practice.

Note 3 Select fabric type based on soil conditions and vehicles loading.

Note 4 Install tracking pad across full width of the access point, or restrict existing traffic to a dedicated egress lane at least 12 feet wide across the top of the pad.

Note 5 If a 50' pad length is not possible due to site geometry, install the maximum length practicable and supplement with additional practices as needed.

Straw Bale Ditch Check

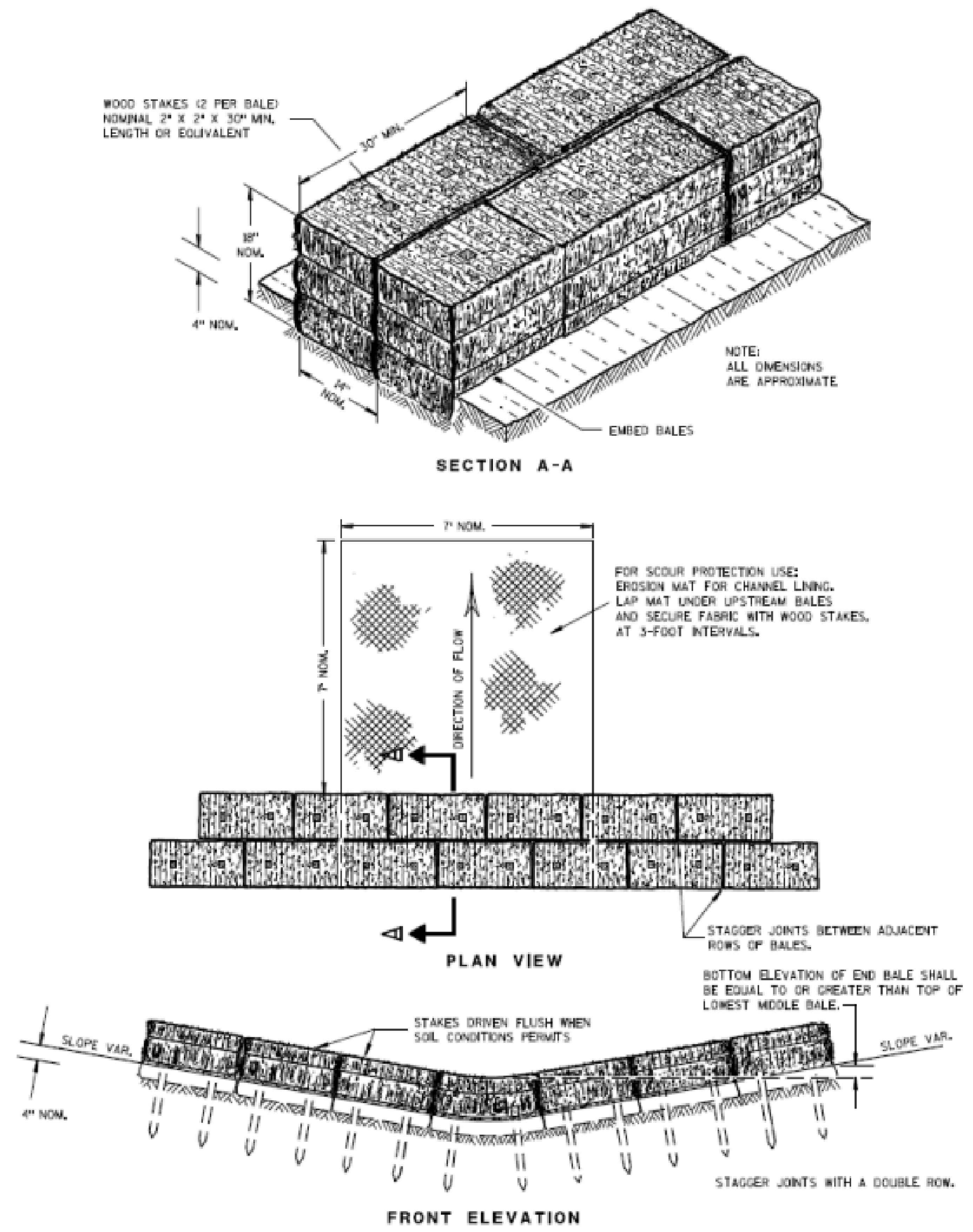

WDNR
11/2022

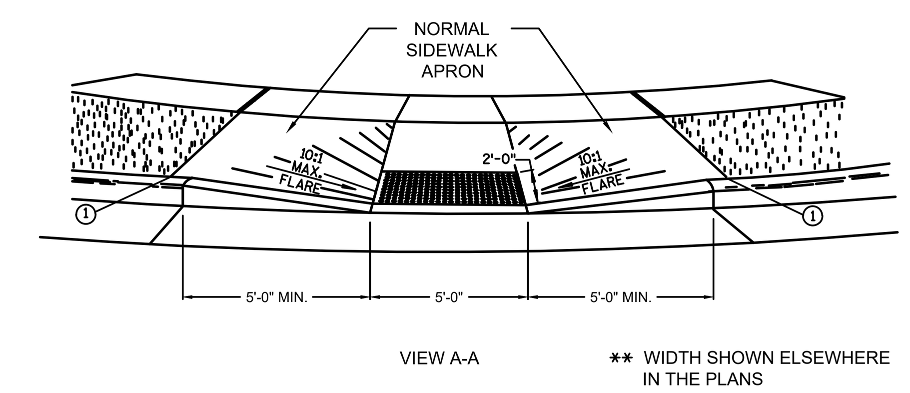

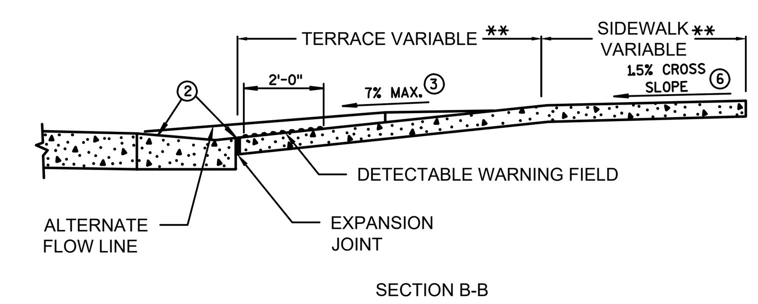

GENERAL NOTES

AVOID PLACING DRAINAGE STRUCTURES, JUNCTION BOXES OR OTHER OBSTRUCTIONS IN FRONT OF RAMP ACCESS AREAS.

DETAILS OF CONSTRUCTION, MATERIALS AND WORKMANSHIP NOT SHOWN ON THIS DRAWING SHALL CONFORM TO THE PERTINENT REQUIREMENTS OF THE STANDARD SPECIFICATIONS AND THE APPLICABLE SPECIAL PROVISIONS.

WHEN NECESSARY, THE SIDEWALK ELEVATION MAY BE LOWERED TO MEET THE HIGH POINT ON THE RAMP.

TYPE 1 RAMPS SHALL HAVE A NORMAL SIDEWALK APRON AND CURB ON BOTH SIDES OF RAMP.

DETECTABLE WARNING FIELDS THAT ARE INSTALLED AS A GROUP OR SIDE BY SIDE, SHALL BE FROM THE SAME MANUFACTURER.

SURFACE TEXTURE OF THE RAMP SHALL BE OBTAINED BY COARSE BROOMING TRANSVERSE TO THE SLOPE OF THE RAMP.

(1) THIS POINT IS AN EXTENSION OF OUTSIDE EDGE OF APPROACHING SIDEWALK WHERE IT MEETS THE BACK OF CONCRETE CURB. POINT LOCATION MAY BE ADJUSTED TO ALIGN WITH BEGINNING OF FULL-HEIGHT CURB IF THIS DISTANCE IS SHORT.

(2) GRADE CHANGE BETWEEN GUTTER FLAG SLOPE AND THE CURB RAMP SLOPE SHALL NOT EXCEED 11%. MAXIMUM GUTTER FLAG SLOPE IS 4%. PROVIDE LONGITUDINAL DRAINAGE AROUND CURB AND AWAY FROM CURB RAMP. NO VERTICAL LIPS OR DISCONTINUITIES GREATER THAN 1/4-INCH ARE ALLOWED. SLOPE OF CURB HEAD OPENING SHALL MATCH THE RAMP SLOPE, MINIMALLY 1.5% AND NOT TO EXCEED 7%. WHEN ADJACENT TO 1.5% LANDING, CONSTRUCT CURB HEAD OPENING AT 1.5% IN THE DIRECTION OF PEDESTRIAN TRAVEL.

(3) ABSOLUTE MAXIMUM 12H:1V (8.33%) CURB RAMP SLOPE IS ALLOWABLE WITH FLATTENED GUTTER FLAG SLOPE AND NOT TO EXCEED 11% GRADE CHANGE.

(4) ±0.5% CONSTRUCTION TOLERANCE IN SIDEWALK CROSS SLOPE. THE SIDEWALK CROSS SLOPE SHALL NOT EXCEED 2% WITHOUT PRIOR APPROVAL FROM THE ENGINEER.

(5) PROVIDE A LEVEL LANDING IN THE STREET AND GUTTER AREA. (2% MAXIMUM SLOPE IN ANY DIRECTION). WHEN THE GUTTER SLOPE EXCEEDS 2%, CONSTRUCT THE LEVEL LANDING IN THE STREET AREA.

(6) PROVIDE A LEVEL LANDING (MAXIMUM 2% SLOPE) IN ANY DIRECTION OF PEDESTRIAN TRAVEL. STANDARD LANDING SIZE IS 5 FEET X 5 FEET.

*DETECTABLE WARNING SURFACE. SURFACE TO BE TRUNCATED DOMES WITH A BASE DIAMETER OF 0.9" MIN. TO 1.4" MAX. AND A TOP DIAMETER OF 50% MIN. TO 65% MAX. OF THE BASE DIAMETER. HEIGHT OF DOMES SHALL HAVE A HEIGHT OF 0.2". TRUNCATED DOMES SHALL HAVE A CENTER-TO-CENTER SPACING OF 1.6" MIN. AND 2.4" MAX. AND A BASE-TO-BASE SPACING OF 0.65" MIN. MEASURED BETWEEN THE MOST ADJACENT DOMES ON THE GRID. DOMES SHALL BE ALIGNED IN A SQUARE GRID PATTERN.

SDD 08F04 Joint Ties for Concrete Pipe and Concrete Collar Detail

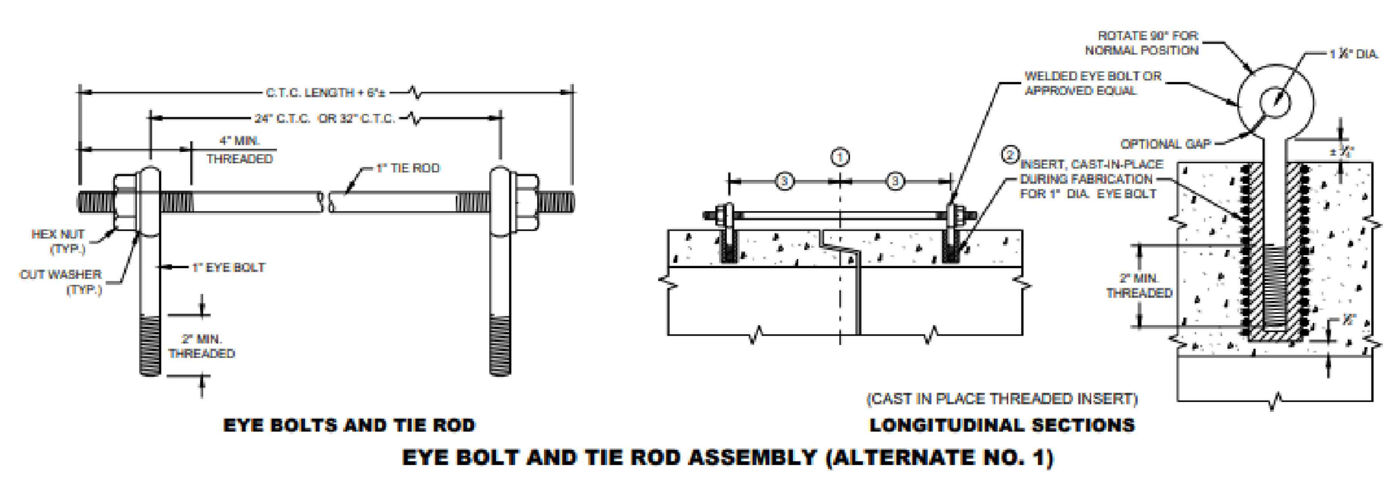

GENERAL NOTES

DETAILS OF CONSTRUCTION, MATERIALS, AND WORKMANSHIP NOT SHOWN ON THIS DRAWING SHALL CONFORM TO THE PERTINENT REQUIREMENTS OF THE STANDARD SPECIFICATIONS AND APPLICABLE SPECIAL PROVISIONS.

CONCRETE CULVERT AND STORM SEWER PIPE SHALL BE TIED TOGETHER IN THE MANNER ILLUSTRATED BY THIS DETAIL AT LOCATIONS DESIGNATED IN THE STANDARD SPECIFICATIONS AND THE PLAN. THE CONTRACTOR MAY USE EITHER ALTERNATE 1, 2 OR 3 FOR DRAINAGE STRUCTURES. ONLY ALTERNATE 1 AND 3 MAY BE USED FOR CATTLE PASSES. UNLESS OTHERWISE STATED IN THE CONTRACT, THE MATERIALS, FABRICATION AND WORK NECESSARY TO TIE THE PIPE BY THIS DETAIL WILL BE CONSIDERED INCIDENTAL TO THE PIPE AND APRON ENDWALLS IF REQUIRED.

DETAILED DRAWINGS FOR PROPOSED ALTERNATE DESIGNS FOR JOINT TIES SHALL BE SUBMITTED TO THE ENGINEER FOR APPROVAL.

JOINT TIES TO BE HOT-DIP GALVANIZED PER ASTM A 153.

(1) CENTER LINE OF TONGUE AND GROOVE OR BELL AND SPIGOT JOINTS.
(2) THE INSIDE OF THE THREADED INSERTS SHALL BE CLEAN TO ALLOW THE INSERTION OF THREADED EYE BOLTS.
(3) HOLES SHALL BE CAST-IN-PLACE OR DRILLED PER THE APPLICABLE DETAIL, AND EQUAL DISTANCE FROM THE CENTERLINE OF THE JOINT.
(4) BOLT PROJECTION INSIDE OF PIPE SHALL NOT EXCEED 2 INCHES.
(5) OPENING TO BE ROD DIAMETER PLUS 1 INCH.
(6) LENGTH ADEQUATE TO EXTEND TO WITHIN 1/2 INCH OF THE INNER SURFACE OF THE PIPE.
(7) EYE BOLT LENGTH DETERMINED BY WALL THICKNESS, BELL THICKNESS AND BOLT PROJECTION INSIDE PIPE.

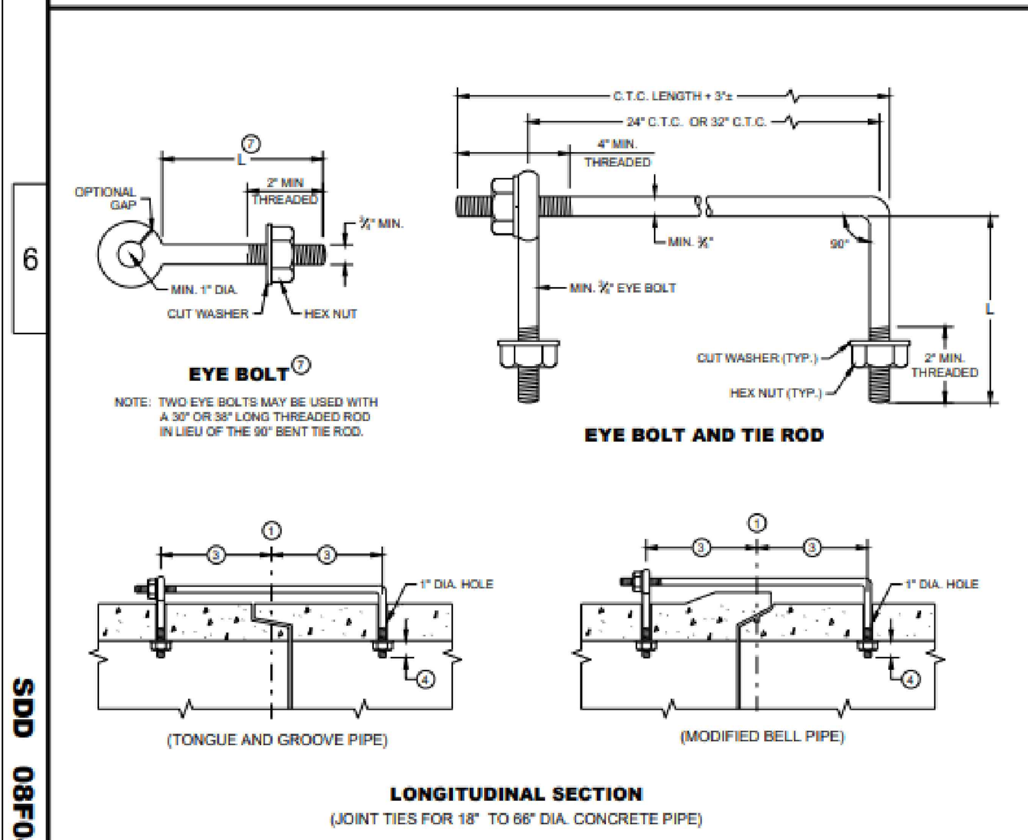

ADJUSTABLE TIE ROD TABLE

PIPE DIAMETER	TIE ROD DIAMETER	D	L_1	N
12 - 60	5/8	5/8	5	1/2
66 - 84	3/4	3/4	5	1/2
90 - 144	1	1	7	1 1/16

DIMENSIONS SHOWN ARE IN INCHES

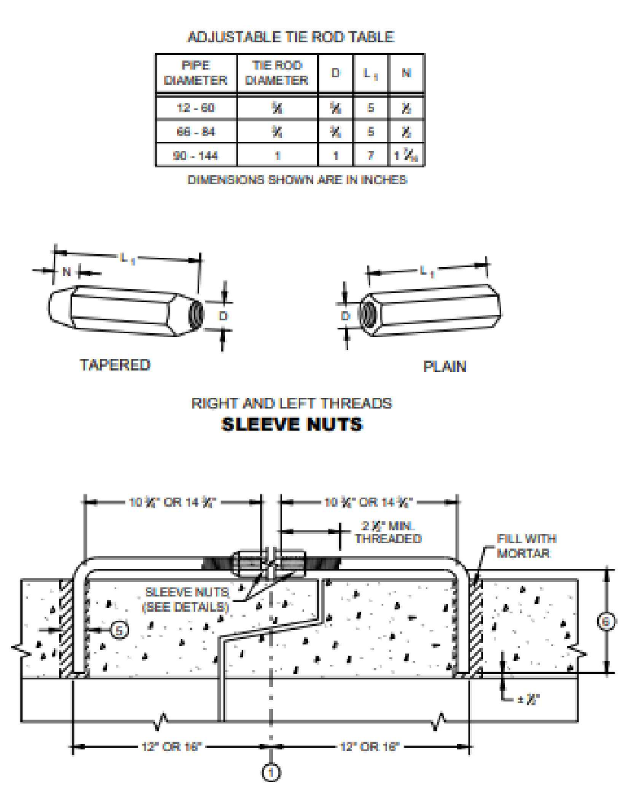

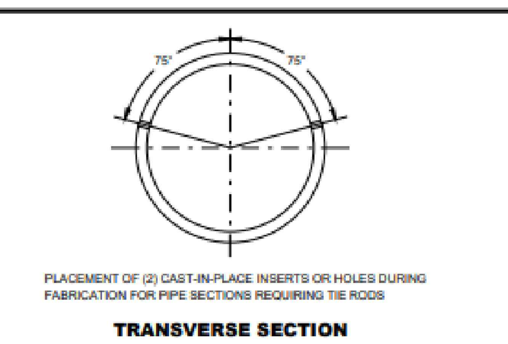

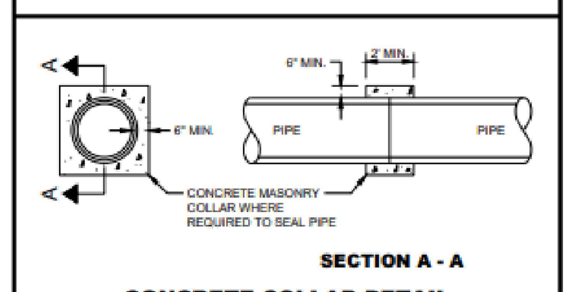

JOINT TIES FOR CONCRETE PIPE AND CONCRETE COLLAR DETAIL

STATE OF WISCONSIN
DEPARTMENT OF TRANSPORTATION

APPROVED November 2021 DATE /S/ Rodney Taylor ROADWAY STANDARDS DEVELOPMENT ENGINEER

SDD 08F04 - 08

JOINT TIES FOR PIPE END SECTIONS

SDD 8F1 Apron Endwalls for Culvert Pipe

METAL APRON ENDWALLS

PIPE DIA. (IN.)	MIN. THICK. (Inches) STEEL	ALUM.	DIMENSIONS (Inches) A (±1")	B (MAX.)	H (±1")	L (±1 1/2")	L_1 (1)	L_2 (1)	W (±2")	APPROX. SLOPE	BODY
12	.064	.060	6	6	6	21	12	17 1/2	24	2 1/2 to 1	1 Pc.
15	.064	.060	7	8	6	26	14	21 3/4	30	2 1/2 to 1	1 Pc.
18	.064	.060	8	10	6	31	15	28 1/4	36	2 1/2 to 1	1 Pc.
21	.064	.060	9	12	6	36	18	29 5/8	42	2 1/2 to 1	1 Pc.
24	.064	.075	10	13	6	41	18	37 1/4	48	2 1/2 to 1	1 Pc.
30	.079	.075	12	16	8	51	18	52 1/4	60	2 1/2 to 1	1 Pc.
36	.079	.105	14	19	9	60	24	59 3/4	72	2 1/2 to 1	2 Pc.
42	.109	.105	16	22	11	69	24	75 5/8	84	2 1/2 to 1	2 Pc.
48	.109	.105	18	27	12	78	24	81	90	2 1/4 to 1	3 Pc.
54	.109	.105	18	30	12	84	30	85 1/2	102	2 1/4 to 1	3 Pc.
60	.109*	.105*	18	33	12	87	—	—	114	2 to 1	3 Pc.
66	.109*	.105*	18	36	12	87	—	—	120	2 to 1	3 Pc.
72	.109*	.105*	18	39	12	87	—	—	126	2 to 1	3 Pc.
78	.109*	.105*	18	42	12	87	—	—	132	1 1/2 to 1	3 Pc.
84	.109*	.105*	18	45	12	87	—	—	138	1 1/2 to 1	3 Pc.
90	.109*	.105*	18	37	12	87	—	—	144	1 1/2 to 1	3 Pc.
96	.109*	.105*	18	35	12	87	—	—	150	1 1/2 to 1	3 Pc.

* EXCEPT CENTER PANEL SEE GENERAL NOTES

REINFORCED CONCRETE APRON ENDWALLS

PIPE DIA. (IN.)	DIMENSIONS (Inches) T	A	B	C	D	E	G	APPROX. SLOPE
12	2	4	24	48 7/8	72 7/8	24	2	3 to 1
15	2 1/4	6	27	46	73	30	2 1/4	3 to 1
18	2 1/2	9	27	46	73	36	2 1/2	3 to 1
21	2 3/4	9	36	37 1/2	73 1/2	42	2 3/4	3 to 1
24	3	9 1/2	43 1/2	30	73 1/2	48	3	3 to 1
27	3 1/4	10 1/2	49 1/2	24	73 1/2	54	3 1/4	3 to 1
30	3 1/2	12	54	19 3/4	73 1/2	60	3 1/2	3 to 1
36	4	15	63	34 3/4	97 3/4	72	4	3 to 1
42	4 1/2	21	63	35	98	78	4 1/2	3 to 1
48	5	24	72	26	98	84	5	3 to 1
54	5 1/2	27	65	*33 1/4 - **35	*98 1/4 - **100	90	5 1/2	2 3/5 to 1
60	6	*30 - **35	60	39	99	96	5	2 to 1
66	6 1/2	*24 - **30	*72 - **78	*21 - **27	99	102	5 1/2	2 to 1
72	7	*24 - **36	78	21	99	108	6	2 to 1
78	7 1/2	*24 - **36	78	21	99	114	6 1/2	2 to 1
84	8	36	90 1/2	21	111 1/2	120	6 1/2	1 1/2 to 1
90	8 1/2	41	87 1/2	24	111 1/2	132	6 1/2	1 1/2 to 1

*MINIMUM
**MAXIMUM

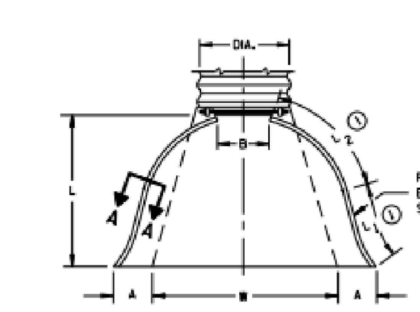

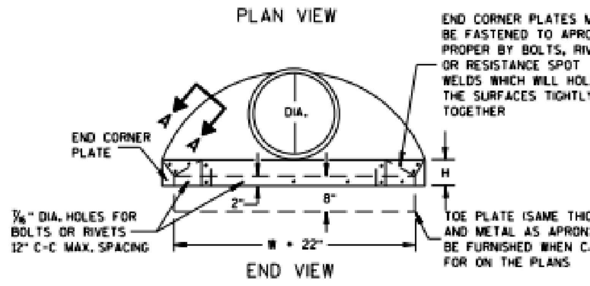

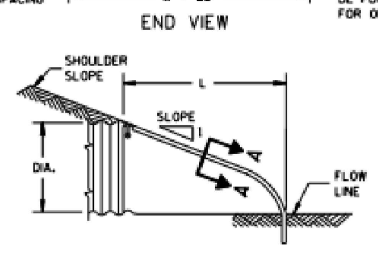

METAL ENDWALLS

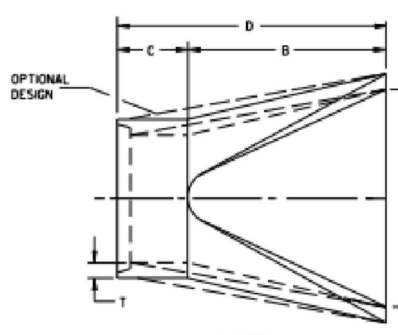

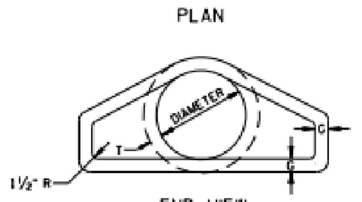

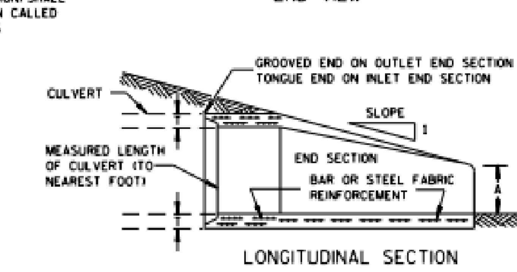

CONCRETE ENDWALLS

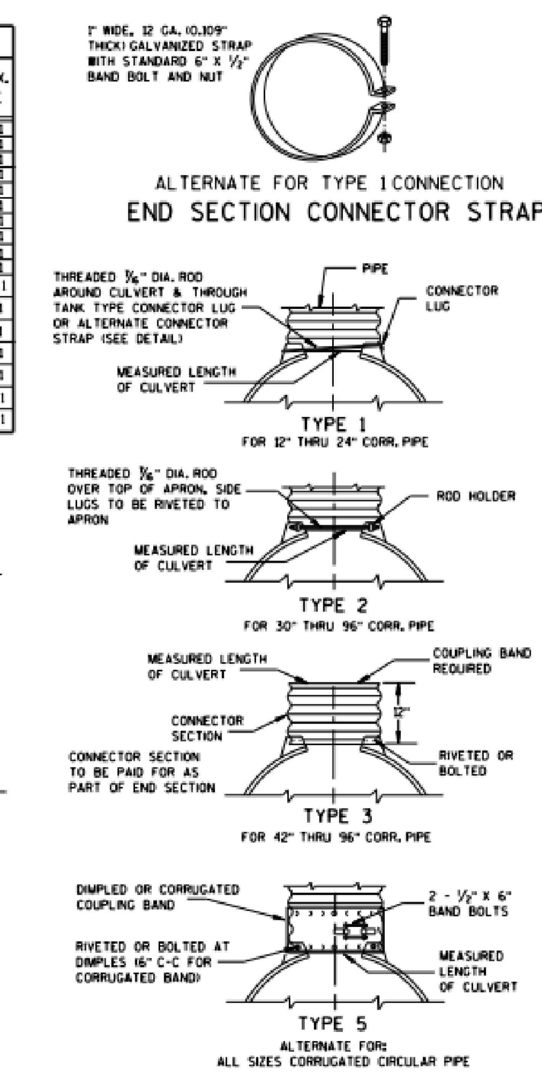

NOTE: DIMPLED BAND FITS OVER OUTSIDE OF ENDWALL, AND CORRUGATED BAND FITS INSIDE ENDWALL. DIMPLED BAND MAY BE USED WITH HELICALLY CORRUGATED PIPE.

FOR CIRCUMFERENTIALLY CORRUGATED PIPE USE ENDWALL CONNECTION DETAILS 1, 2, 3 OR 5 AS APPLICABLE.

FOR HELICALLY CORRUGATED PIPE USE ENDWALL CONNECTION DETAILS 1, 2 OR 5.

FOR HELICALLY CORRUGATED PIPES WITH TWO CIRCUMFERENTIAL CORRUGATIONS AT EACH END USE ENDWALL CONNECTION DETAILS 1, 2 OR 3.

CONNECTION DETAILS

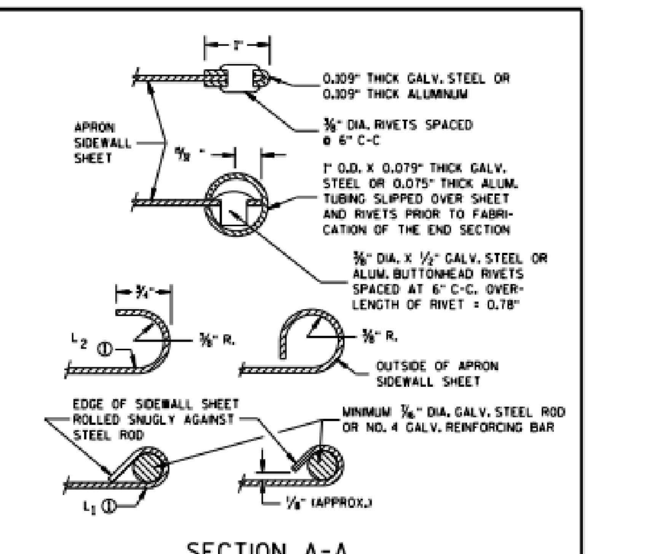

GENERAL NOTES

DETAILS OF CONSTRUCTION, MATERIALS AND WORKMANSHIP NOT SHOWN ON THIS DRAWING SHALL CONFORM TO THE PERTINENT REQUIREMENTS OF THE STANDARD SPECIFICATIONS AND THE APPLICABLE SPECIAL PROVISIONS.

CONCRETE CULVERT ENDWALLS MAY NOT BE USED WITH GALVANIZED STEEL OR ALUMINUM CULVERT PIPE OR VISE VERSA. GALVANIZED STEEL OR ALUMINUM ENDWALLS SHALL NORMALLY BE INSTALLED ON CULVERT PIPE OF THE SAME METAL.

ALL THREE PIECE STEEL APRON ENDWALLS FOR 60" DIAMETER PIPE AND LARGER SHALL HAVE 0.109" SIDES AND 0.138" CENTER PANELS. ALL THREE PIECE ALUMINUM APRON ENDWALLS FOR 60" DIAMETER PIPE AND LARGER SHALL HAVE 0.105" SIDES AND 0.134" CENTER PANELS. THE WIDTH OF CENTER PANELS SHALL BE GREATER THAN 20 PERCENT OF THE PIPE PERIMETER.

LAP SEAMS SHALL BE TIGHTLY JOINED BY GALVANIZED RIVETS OR BOLTS FOR STEEL UNITS AND ALUMINUM RIVETS AND BOLTS FOR ALUMINUM UNITS. FOR THE 60" THROUGH 96" DIAMETER APRON ENDWALL SIZES, THE REINFORCED EDGES AND CENTER PANEL SEAMS SHALL BE FURTHER REINFORCED WITH GALVANIZED STEEL OR ALUMINUM STIFFENER ANGLES. THE ANGLES SHALL BE ATTACHED BY GALVANIZED NUTS AND BOLTS FOR STEEL UNITS AND ALUMINUM NUTS AND BOLTS FOR ALUMINUM UNITS.

WHERE TWO OR MORE PIPES WITH APRON ENDWALLS ARE LAID ADJACENT TO EACH OTHER, THEY SHALL BE SEPARATED BY A DISTANCE SUFFICIENT TO PROVIDE A MINIMUM CLEARANCE OF 6 INCHES BETWEEN APRON ENDWALLS.

(1) FOR PIPE SIZES UP TO 60" DIAMETER, A 180° ROLLED EDGE MAY BE USED INSTEAD OF STEEL ROD REINFORCEMENT. SEE SECTION A-A.

APRON ENDWALLS FOR CULVERT PIPE

STATE OF WISCONSIN
DEPARTMENT OF TRANSPORTATION

APPROVED 8-30-94 DATE /S/ Rory L. Rhinesmith CHIEF ROADWAY DEVELOPMENT ENGINEER
FHWA

S.D.D. 8 F 1-11

6

REVISION DESCRIPTION | NO | DATE

Payne+Dolan
A WALBEC COMPANY
www.walbecgroup.com
(920) 757-7559
W 6380 DESIGN DRIVE
GREENVILLE, WI 54942

PROJECT
EMPLOYEE PARKING
2121 AMERICAN BLVD
DE PERE, WI

CLIENT
ROBINSON METAL, INC.
1740 EISERHOWER DRIVE
DE PERE, WI 54114

Seal
WISCONSIN STEVEN KOLAR E-35047 GREENVILLE, WIS. PROFESSIONAL ENGINEER

SHEET TITLE
CONSTRUCTION DETAILS

COPYRIGHT NOTICE
THESE DRAWINGS AS INSTRUMENTS OF SERVICE REMAIN THE PROPERTY OF PAYNE & DOLAN, INC. ANY CHANGES, PUBLICATION, OR UNAUTHORIZED USE IS PROHIBITED UNLESS EXPRESSLY AUTHORIZED BY PAYNE & DOLAN, INC.

Drawing Scale:
Drawn: GME 05/07/2025
Checked: SPK 05/07/2025
P&D Project No: #490896
Sheet No.
C9