Planning/Zoning Application

Planning & Zoning Department

Submitted On:
Apr 9, 2024, 11:45AM EDT

Parcel Number: (Include ALL parcels)	ED-F0103-1, ED-F0103-5
Nearest property address to the project site:	**Street Address:** 875 HERITAGE ROAD **City:** De Pere **State:** WI **Zip:** 54115
Check each project type that is being applied for:	Site Plan
Current De Pere Zoning Districts:	C
Existing Site Land Uses:	Commercial
Proposed Site Land Uses:	Commercial
Does the project comply with the Comprehensive Plan?	Yes
Has City Staff been contacted for a pre-consultation meeting?	Yes
Property Owner:	**First Name:** Greg **Last Name:** DeCleene
Is the property owner's address the same as the nearest property address?	Yes
Property Owner's Phone Number:	920-639-3819
Property Owner's Email Address:	gjdecleene5@aol.com
Is someone processing the project for the property owner as their authorized representative?	Yes
Authorized Representative's Name:	**First Name:** Patrick **Last Name:** Kuehl
Authorized Representative's Business Name:	Robert E. Lee & Associates, Inc.
Authorized Representative's Phone Number:	920-544-4453
Authorized Representative's Email Address:	pkuehl@releeinc.com

Please attach a PDF copy of the site plan.	Chicago Sty Pub - Swan Club - 2024-04-09.pdf
Would you like a basic checklist of information to include in the site plan?	Yes
How do you plan on paying for your application?	Online with a credit card
Total Due:	$350.00
Signature Data	First Name: Patrick Last Name: Kuehl Email Address: pkuehl@releeinc.com Signed at: April 9, 2024 11:44am America/New_York
User's Session Information	IP Address: 74.135.209.84 Referrer URL:

CITY OF DE PERE

335 South Broadway, De Pere, WI 54115 | www.de-pere.org

April 25, 2024

Patrick Kuehl
Robert E Lee & Associates INC
1250 Centennial Centre BL
Hobart, WI 54155

RE: Site Plan Review for the Chicago Street Pub-Swan Club Expansion at 875 Heritage RD
Parcels ED-F0103-1, ED-F0103-5

Dear Patrick:

Thank you for the site plan for the Chicago Street Pub-Swan Club Expansion at 875 Heritage RD. The City of De Pere staff reviewed the site plan on April 25, 2024, and recommended approval, with the following condition that must be addressed prior to submitting a request for occupancy permits:

- Parcels ED-F0103-1 and ED-F0103-5 must be combined. Staff are aware that the property owner requested a parcel combination (without any maps or deeds) from Brown County. If Brown County denies the parcel combination, then the property owner must complete the combination of parcels by other means (e.g., a Combination CSM).
- Show property boundary information. The lot line lengths are shown but the northing and eastings are omitted.
- After landscaping is installed, provide a statement from the landscaper that verifies that all landscaping has been installed according to the approved landscaping plan to minimize delays or violations related to this topic.
- After the exterior lighting is installed, provide a statement from the installer that the light spill from the property does not exceed the approved photometric plan.

You may now proceed to the Inspection Division to begin the process of obtaining permits. Should you have any questions regarding the decision or require further information, feel free to contact me at 339-4043 or pschleinz@deperewi.gov.

Sincerely,

Peter Schleinz
Senior Planner | Zoning Administrator

cc: Daniel J. Lindstrom, AICP, Development Services Director
Dennis Jensen, Senior Building Inspector

Soil Loss & Sediment Discharge Calculation Tool

for use on Construction Sites in the State of Wisconsin

WDNR Version 2.0 (06-29-2017)

WISCONSIN DEPT. OF NATURAL RESOURCES

YEAR 1

Developer: Swan Club / Chicago Street Pub

Project: Parking Lot / Patio -Picleball Courts

Date: 04/18/24

County: Brown

Version 1.0

Activity (1)	Begin Date (2)	End Date (3)	Period % R (4)	Annual R Factor (5)	Sub Soil Texture (6)	Soil Erodibility K Factor (7)	Slope (%) (8)	Slope Length (ft) (9)	LS Factor (10)	Land Cover C Factor (11)	Soil loss A (tons/acre) (12)	SDF (13)	Sediment Control Practice (14)	Sediment Discharge (t/ac) (15)
Bare Ground	04/25/24	06/24/24	26.8%	100	Clay Loam	0.37	4.5%	80	0.42	1.00	4.2	0.911	Inlet Protection	2.7
Seeding	06/24/24	08/31/24	45.1%	100	Clay Loam	0.37	5.0%	60	0.42	0.40	2.8	0.922	Inlet Protection	1.8
End	08/31/24	-----	-----	-----	-------	-----	5.0%	60	0.42	------	-----	0.000		0.0
		-----	-----	-----	-------	-----	5.0%	60	0.42	-----	-----	0.000		0.0
		-----	-----	-----	-------	-----	5.0%	0	-----	-----	-----	0.000		0.0
		-----	-----	-----	-------	-----	0.0%	0	-----	-----	-----	0.000		0.0
										TOTAL	**7.0**		**TOTAL**	**4.5**
													% Reduction Required	**NONE**

Notes:

See Help Page for further descriptions of variables and items in drop-down boxes.
The last land disturbing activity on each sheet must be 'End'. This is either 12 months from the start of construction or final stabilization.
For periods of construction that exceed 12 months, please demonstrate that 5 tons/acre/year is not exceeded in any given 12 month period.

NOTE: THIS TOOL ONLY ADDRESSED SOIL EROSION DUE TO SHEET FLOW. MEASURES TO CONTROL CHANNEL EROSION MAY ALSO BE REQUIRED TO MEET SEDIMENT DISCHARGE REQUIREMENTS.

Recommended Permanent Seeding Dates:

4/15-6/1	and	8/1-8/21	Turf, introduced grasses and legumes
Thaw-6/30			Native Grasses, forbs, and legumes

Designed By:	P. KUEHL
Date	4/18/2024

R:\4400\4438\4438013\Soil Loss Calc\USLEmodel.xlsm

LEGEND

TO BE DEMOLISHED

TREE/SHRUB TO BE REMOVED

DEMOLITION NOTES

1. EXISTING ASPHALT AND BASE COURSE MAY BE PULVERIZED AND STOCKPILED ON SITE FOR FUTURE USE.
2. EXISTING GAS, ELECTRIC, CABLE TELEVISION AND TELEPHONE TO BE REMOVED AND/OR RELOCATED BY OTHERS. WORK SHALL BE COORDINATED BY GENERAL CONTRACTOR.
3. ALL MISCELLANEOUS STRUCTURES SHALL BE REMOVED.
4. DRIVEWAY OPENINGS SHALL BE REMOVED AND CURB OPENINGS SHALL BE CLOSED IN ACCORDANCE WITH STANDARD DETAIL "CURB REMOVAL", SEE DETAIL SHEETS.

BENCHMARK	BENCHMARK ESTABLISHED BY: ROBERT E. LEE & ASSOCIATES, INC. **FIELD VERIFY BENCHMARKS FOR ACCURACY.**	
NO.	DESCRIPTION	EL.
51	N. SIDE OF CONCRETE LIGHT POLE BASE	640.04
52	E SIDE OF CONCRETE LIGHT POLE BASE	640.36
53	S SIDE OF CONCRETE LIGHT POLE BASE	641.21
54	NE CORNER OF CONCRETE SLAB	633.97

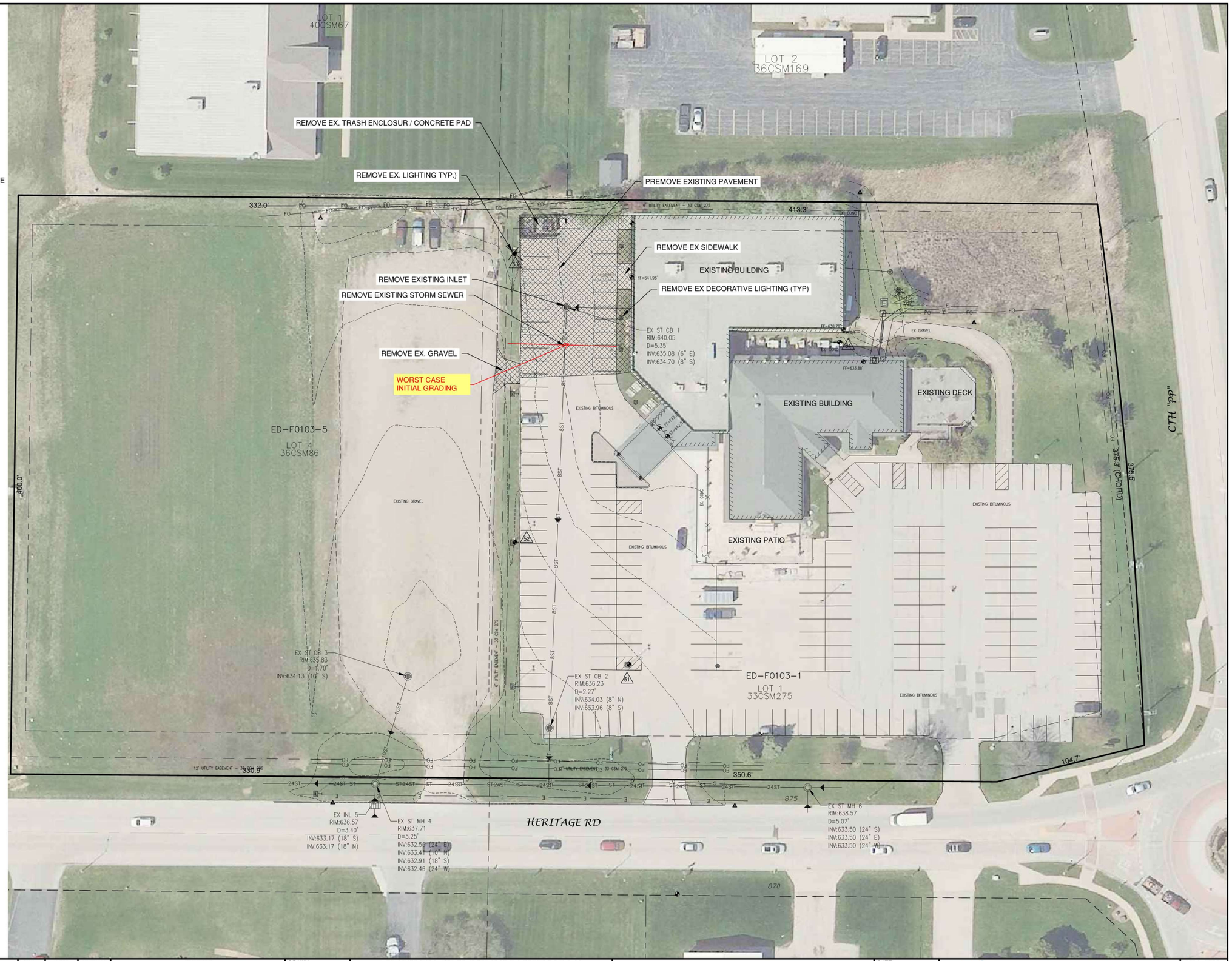

NORTH

0' 30' 60'

SCALE IN FEET

NO.	DATE	APPROV.	REVISION	NO.	DATE	APPROV.	REVISION

DRAWN PHK
CHECKED
DESIGNED PHK

PARKING LOT & PATIO / PICKLEBALL COURTS
FOR CHICAGO STREET PUB / SWAN CLUB
CITY OF DE PERE
BROWN CO. WISCONSIN

EXISTING CONDITIONS / DEMOLITION PLAN

DATE 04/09/24
FILE 4438013T
JOB NO. 4438-013

Robert E. Lee & Associates, Inc.
1250 Centennial Centre Blvd | Hobart, WI | 920-662-9641 | releeinc.com

SHEET NO. C2

File: R:\4400\4438\4438013\dwg\4438013t.dwg
LAYOUT: EX CONDITIONS DEMO PLAN Date: Apr 18, 2024 - 3:31pm

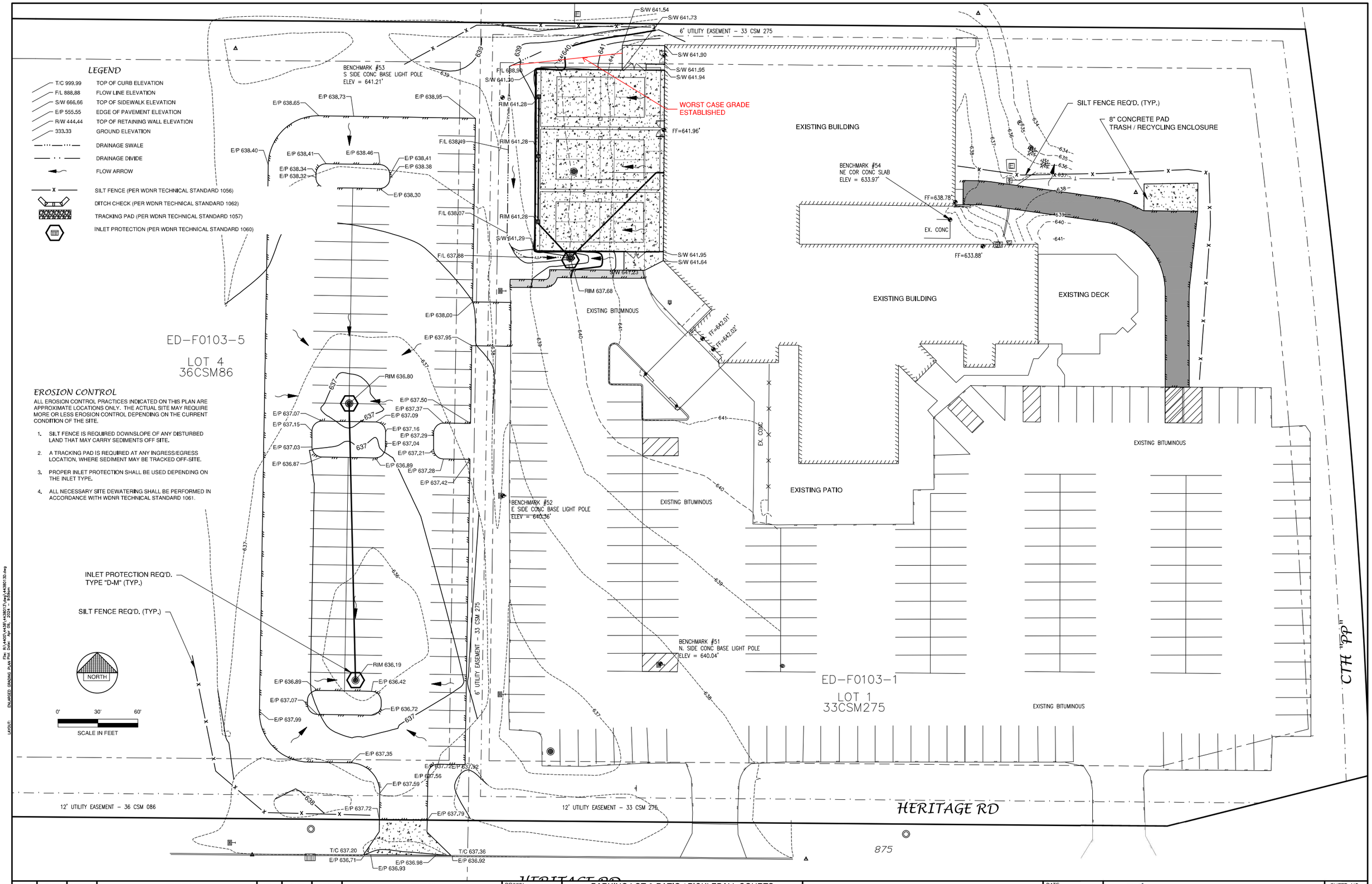

NO.	DATE	APPROV.	REVISION	NO.	DATE	APPROV.	REVISION

DRAWN PHK
CHECKED ----
DESIGNED PHK

PARKING LOT & PATIO / PICKLEBALL COURTS
FOR CHICAGO STREET PUB / SWAN CLUB
CITY OF DE PERE
BROWN CO. WISCONSIN

ENLARGED GRADING & EROSION CONTROL PLAN

DATE 04/09/24
FILE 4438013D
JOB NO. 4438013

Robert E. Lee & Associates, Inc.
1250 Centennial Centre Blvd | Hobart, WI | 920-662-9641 | releeinc.com

SHEET NO. C6

File: R:\4400\4438\4438013\dwg\4438130.dwg
Plot Date: Apr 09, 2024 - 9:59am
LAYOUT: ENLARGED GRADING PLAN

PARKING LOT & PATIO / PICKLEBALL COURTS
FOR CHICAGO STREET PUB / SWAN CLUB
CITY OF DE PERE, BROWN CO. WISCONSIN

ATTENTION!
DOWNLOADED PLANS ARE NOT SCALEABLE, NEITHER THE OWNER OR THE ENGINEER SHALL BE HELD RESPONSIBLE FOR THE SCALE OR PRINT QUALITY OF DOWNLOADED PLANS. ONLY PRINTED PLANS FROM BLUE PRINT SERVICE CO., INC. SHALL BE CONSIDERED TO BE SCALEABLE PLANS.

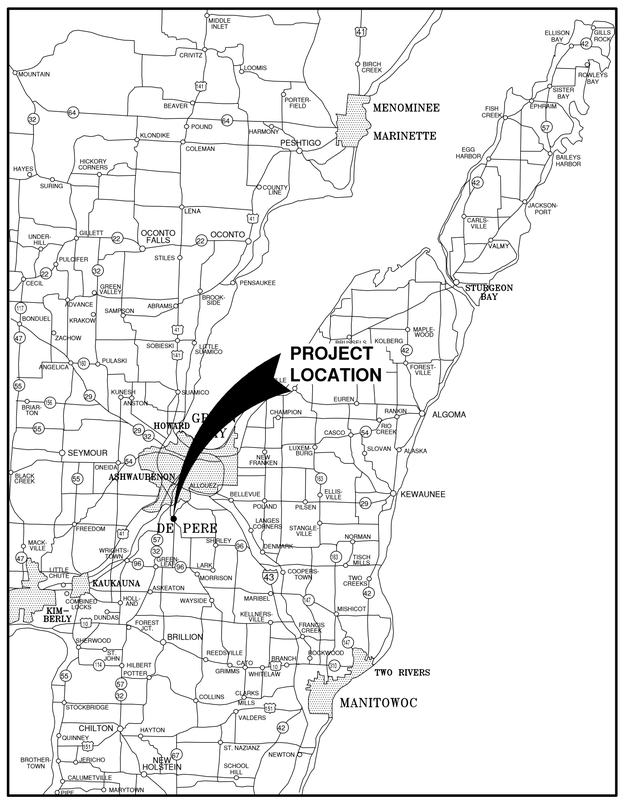

VICINITY MAP

NOTE:
EXISTING UTILITIES SHOWN ON PLANS ARE APPROXIMATE. THE CONTRACTOR SHALL BE RESPONSIBLE FOR OBTAINING EXACT LOCATIONS AND ELEVATIONS OF ALL UTILITIES, WHETHER SHOWN OR NOT, FROM THE OWNERS OF THE RESPECTIVE UTILITIES. ALL UTILITY OWNERS SHALL BE NOTIFIED FOR LOCATES BY THE CONTRACTOR 72 HOURS PRIOR TO EXCAVATION.

NOTE:
ALL EROSION CONTROL MEASURES SHALL BE IN PLACE PRIOR TO CONSTRUCTION AND SHALL CONFORM TO THE WISCONSIN DEPARTMENT OF NATURAL RESOURCES CONSTRUCTION SITE EROSION CONTROL AND TECHNICAL STANDARDS.

INDEX TO DRAWINGS

SHT. NO.	DESCRIPTION
C	LOCATION MAPS AND INDEX TO DRAWINGS
C1	GENERAL NOTES
C2	EXISTING SITE CONDITIONS /DEMOLITION PLAN
C3	OVERALL SITE PLAN
C4	ENLARGED SITE PLAN
C5	ENLARGED UTILITY PLAN
C6	ENLARGED GRADING & EROSION CONTROL PLAN
C7	MISCELLANEOUS DETAILS
C8	MISCELLANEOUS DETAILS
C9	EROSION CONTROL - INLET PROTECTION TYPE D-HR AND TYPE D-M
C10	EROSION CONTROL - SHEET FLOW DETAILS
C11	EROSION CONTROL - TRACKOUT CONTROL PRACTICES
L-1	LANDSCAPING PLAN

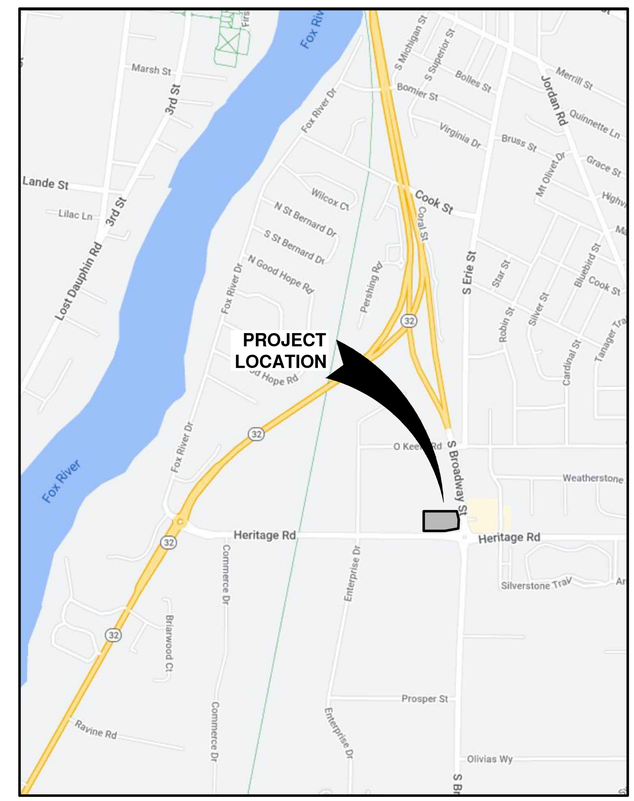

LOCATION MAP

NO.	DATE	APPROV.	REVISION	NO.	DATE	APPROV.	REVISION

DRAWN KDC
CHECKED –
DESIGNED PHK

PARKING LOT & PATIO / PICKLEBALL COURTS
FOR CHICAGO STREET PUB / SWAN CLUB
CITY OF DE PERE
BROWN CO. WISCONSIN

LOCATION MAPS AND INDEX TO DRAWINGS

DATE 04/09/24
FILE 4438013C
JOB NO. 4438013

Robert E. Lee & Associates, Inc.
1250 Centennial Centre Blvd | Hobart, WI | 920-662-9641 | releeinc.com

SHEET NO. C

File: R:\4400\4438\4438013\dwg\4438013C.dwg
Plot Date: Apr 09, 2024 – 10:25am

OWNER INFORMATION:

JPG ENTERPRISES LLC
875 HERITAGE ROAD00
DE PERE, WI 54115

CONTRACTOR INFORMATION:

IEI GENERAL CONTRACTORS, INC.
1725 MIDWAY ROAD
DE PERE, WI 54115

920-337-2111

CONTACT: JEFF CLINE, PROJECT MANAGER

UTILITY INFORMATION:

UTILITIES PRESENT:
CITY OF DE PERE DEPARTMENT OF PUBLIC WORKS, WISCONSIN PUBLIC SERVICE CORP., AT & T, TIME WARNER CABLE, WINDSTREAM COMMUNICATIONS AND BROWN COUNTY TECHNOLOGY.

UTILITIES SHOWN ON THIS MAP ARE BASED ON LOCATES FROM:

DIGGER'S HOTLINE TICKET NUMBER 20232118670, DATED 06/03/2023, VISIBLE OBSERVATION AND RECORD UTILITY PLAN DOCUMENTS. UTILITY LINE LOCATIONS SHOULD BE VERIFIED PRIOR TO ANY DIGGING. THIS SITE MAY CONTAIN BURIED UTILITIES NOT IDENTIFIED ON THIS MAP.

DIGGERS HOTLINE = 1-800-242-8511

WATER/SANITARY/STORM SEWER:
DEPARTMENT OF PUBLIC WORKS
CITY OF DE PERE
925 SIXTH ST.
DE PERE, WI 54155

(920) 339-8076

GAS & ELECTRIC:
WISCONSIN PUBLIC SERVICE CORP.
700 N. ADAMS ST.
GREEN BAY, WI 54307

(800) 797-7434

TELECOMMUNICATIONS:
AT & T / SBC
205 S. JEFFERSON ST.
GREEN BAY, WI 54301

(920) 433-4147

TELECOMMUNICATIONS:
TIME WARNER CABLE
2580 W. MASON ST.
GREEN BAY, WI 54303

(920) 944-1581

TELECOMMUNICATIONS:
WINDSTREAM COMMUNICATIONS
4001 RODNEY PARHAM RD.
LITTLE ROCK, AR 72212

(501) 748-7000

TELECOMMUNICATIONS:
BROWN COUNTY TECHNOLOGY
111 N. JEFFERSON ST.
GREEN BAY, WI 54301

(920) 448-6266

DIGGERS HOTLINE
Dial 811 or (800) 242-8511
www.DiggersHotline.com

TO OBTAIN LOCATION OF PARTICIPANTS UNDERGROUND FACILITIES BEFORE YOU DIG IN WISCONSIN

WIS. STATUTE 182.0175 (1974) REQUIRES MIN. OF 3 WORK DAYS NOTICE BEFORE YOU EXCAVATE.

LEGEND

- FIRE HYDRANT
- WATER VALVE/CURB STOP
- WATER MANHOLE
- REDUCER/INCREASER
- SANITARY MANHOLE
- AIR RELIEF MANHOLE
- STORM MANHOLE
- OPEN STORM MANHOLE
- STORM INLET
- STORM INLET MANHOLE
- TANK COVER
- SOIL BORING
- POST
- IRON PIPE/ROD
- PK NAIL
- POWER POLE
- POWER POLE W/GUY WIRE
- LIGHT POLE
- TRAFFIC SIGNAL POLE
- ELECTRIC MANHOLE
- ELECTRIC METER
- TELEPHONE MANHOLE
- TELEPHONE PEDESTAL
- CABLE TV MANHOLE
- CABLE TV PEDESTAL
- GAS VALVE
- GAS METER
- MAILBOX
- SIGN
- BOLLARD
- DECIDUOUS TREE
- CONIFEROUS TREE
- BUSH
- RIP RAP
- CULVERT
- WETLANDS
- HANDICAP PARKING

- EDGE OF ASPHALT
- EDGE OF GRAVEL
- CURB & GUTTER
- TREE/BRUSH LINE
- 750 CONTOUR LINE
- RETAINING WALL
- GUARD RAIL
- FENCE

- 8SS — SANITARY SEWER (SIZE NOTED)
- 4FM — FORCEMAIN (SIZE NOTED)
- 10ST — STORM SEWER (SIZE NOTED)
- 6W — WATERMAIN (SIZE NOTED)
- G — GAS LINE
- OT — OVERHEAD TELEPHONE LINE
- T — UNDERGROUND TELEPHONE LINE
- OE — OVERHEAD ELECTRIC LINE
- E — UNDERGROUND ELECTRIC LINE
- OTV — OVERHEAD CABLE TV LINE
- TV — CABLE TV LINE
- FO — FIBER OPTIC LINE
- R/W LINE
- PROPERTY LINE
- EASEMENT LINE
- BUILDING SETBACK LINE
- SECTION LINE

GR.	GRAVEL	WM	WATERMAIN	VPC	VERTICAL POINT OF CURVATURE	B-B	BACK TO BACK (OF CURB)
BIT.	BITUMINOUS	HYD.	HYDRANT	VPI	VERTICAL POINT OF INTERSECTION	F-F	FACE TO FACE (OF CURB)
ASPH	ASPHALT	WV	WATER VALVE	VPT	VERTICAL POINT OF TANGENCY	R/W	RIGHT OF WAY
CONC	CONCRETE	SAN	SANITARY SEWER	PC	POINT OF CURVATURE	T/C	TOP OF CURB
SW	SIDEWALK	MH	MANHOLE	PI	POINT OF INTERSECTION	F/L	FLOW LINE
BLDG	BUILDING	ST	STORM SEWER	PT	POINT OF TANGENCY	C/L	CENTERLINE
HSE	HOUSE	CB	CATCH BASIN	R	RADIUS	R/L	REFERENCE LINE
PED	PEDESTAL	TELE	TELEPHONE	EX	EXISTING	INV	INVERT
PP	POWER POLE	ELEC	ELECTRIC	PR	PROPOSED	CMP	CORRUGATED METAL PIPE
LP	LIGHT POLE	TV	TELEVISION	EOR	END OF RADIUS	RCP	REINFORCED CONCRETE PIPE
BM	BENCH MARK	STA.	STATION	BOC	BACK OF CURB	CULV	CULVERT

File: R:\14400\4438\4438013\dwg\4438013t.dwg
Plot Date: Apr 09, 2024 - 9:54am
LAYOUT: LEGEND - NOTES

NO.	DATE	APPROV.	REVISION	NO.	DATE	APPROV.	REVISION

DRAWN PHK
CHECKED ----
DESIGNED PHK

PARKING LOT & PATIO / PICKLEBALL COURTS
FOR CHICAGO STREET PUB / SWAN CLUB
CITY OF DE PERE
BROWN CO. WISCONSIN

GENERAL NOTES

DATE 02/2024
FILE 4438013T
JOB NO. 4438-013

Robert E. Lee & Associates, Inc.
1250 Centennial Centre Blvd | Hobart, WI | 920-662-9641 | releeinc.com

SHEET NO. C1

LEGEND

TO BE DEMOLISHED

TREE/SHRUB TO BE REMOVED

DEMOLITION NOTES

1. EXISTING ASPHALT AND BASE COURSE MAY BE PULVERIZED AND STOCKPILED ON SITE FOR FUTURE USE.
2. EXISTING GAS, ELECTRIC, CABLE TELEVISION AND TELEPHONE TO BE REMOVED AND/OR RELOCATED BY OTHERS. WORK SHALL BE COORDINATED BY GENERAL CONTRACTOR.
3. ALL MISCELLANEOUS STRUCTURES SHALL BE REMOVED.
4. DRIVEWAY OPENINGS SHALL BE REMOVED AND CURB OPENINGS SHALL BE CLOSED IN ACCORDANCE WITH STANDARD DETAIL "CURB REMOVAL", SEE DETAIL SHEETS.

BENCHMARK	BENCHMARK ESTABLISHED BY: ROBERT E. LEE & ASSOCIATES, INC. **FIELD VERIFY BENCHMARKS FOR ACCURACY.**	
NO.	DESCRIPTION	EL.
51	N. SIDE OF CONCRETE LIGHT POLE BASE	640.04
52	E SIDE OF CONCRETE LIGHT POLE BASE	640.36
53	S SIDE OF CONCRETE LIGHT POLE BASE	641.21
54	NE CORNER OF CONCRETE SLAB	633.97

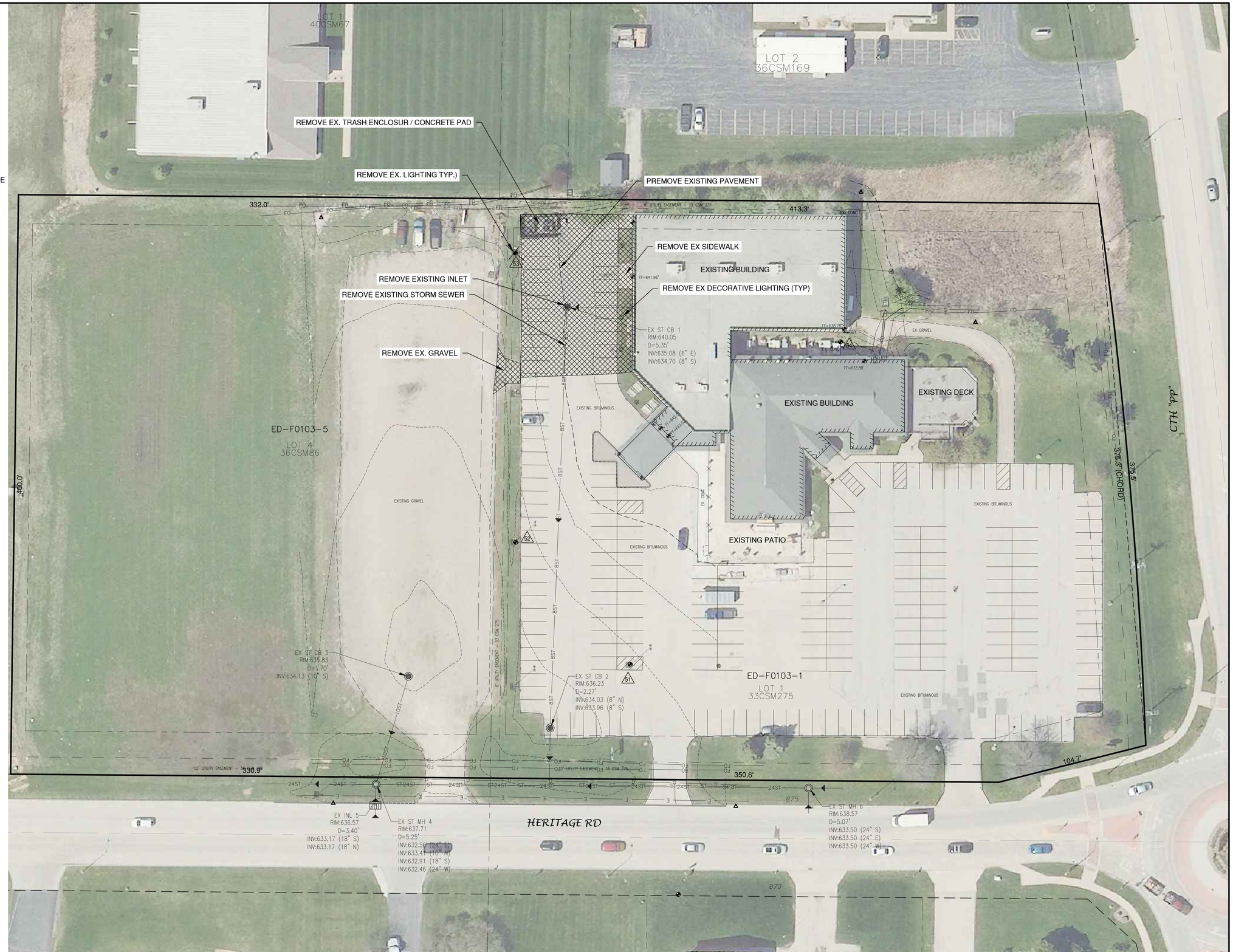

NO.	DATE	APPROV.	REVISION	NO.	DATE	APPROV.	REVISION

DRAWN PHK
CHECKED ----
DESIGNED PHK

PARKING LOT & PATIO / PICKLEBALL COURTS
FOR CHICAGO STREET PUB / SWAN CLUB
CITY OF DE PERE
BROWN CO. WISCONSIN

EXISTING CONDITIONS / DEMOLITION PLAN

DATE 04/09/24
FILE 4438013T
JOB NO. 4438-013

Robert E. Lee & Associates, Inc.
1250 Centennial Centre Blvd | Hobart, WI | 920-662-9641 | releeinc.com

SHEET NO. C2

File: R:\4400\4438\4438013\dwg\4438013t.dwg
LAYOUT: EX. CONDITIONS SEMI PLANT Date: Apr 15, 2024 - 8:01pm

NOTE

ALL DISTURBED AREAS SHALL BE TOPSOILED TO A DEPTH OF 6 INCHES, SEEDED AND MULCHED. AREA TO BE RAKED FREE OF STONES AND CLUMPS.

PARKING DATA

TOTAL PARKING STALLS PROVIDED = 277

HANDICAP ACCESSIBLE PARKING STALLS = 7

TOTAL PARKING STALLS REQUIRED = 181

SITE DATA (PARCELS ED-F0103-1, ED-F0103-5)

TOTAL AREA = 7.023 ACRES, 305,936 S.F.

BUILDING AREA = 0.584 ACRES, 25,461 S.F. (8.32%)

SIDEWALK/PARKING LOT AREA = 3.222 ACRES, 140.326 S.F. (45.88%)

GREEN SPACE = 3.217 ACRES, 140,149 S.F. (45.80%)

ZONING

C - COMMERCIAL

CONSTRUCTION CLASSIFICATION

2B

PARCEL NO.

ED-F0103-1, ED-F0103-5

LEGEND

- CONCRETE PAVEMENT
- ASPHALT PAVEMENT (LIGHT) (32,475 S.F.)
- LANDSCAPE AREA
- GREEN SPACE
- TRAFFIC FLOW ARROW
- HANDICAPPED PARKING
- (12) INDICATES NUMBER OF PARKING STALLS

BENCHMARK	BENCHMARK ESTABLISHED BY: ROBERT E. LEE & ASSOCIATES, INC. **FIELD VERIFY BENCHMARKS FOR ACCURACY.**	
NO.	DESCRIPTION	EL.
51	N. SIDE OF CONCRETE LIGHT POLE BASE	640.04
52	E SIDE OF CONCRETE LIGHT POLE BASE	640.36
53	S SIDE OF CONCRETE LIGHT POLE BASE	641.21
54	NE CORNER OF CONCRETE SLAB	633.97

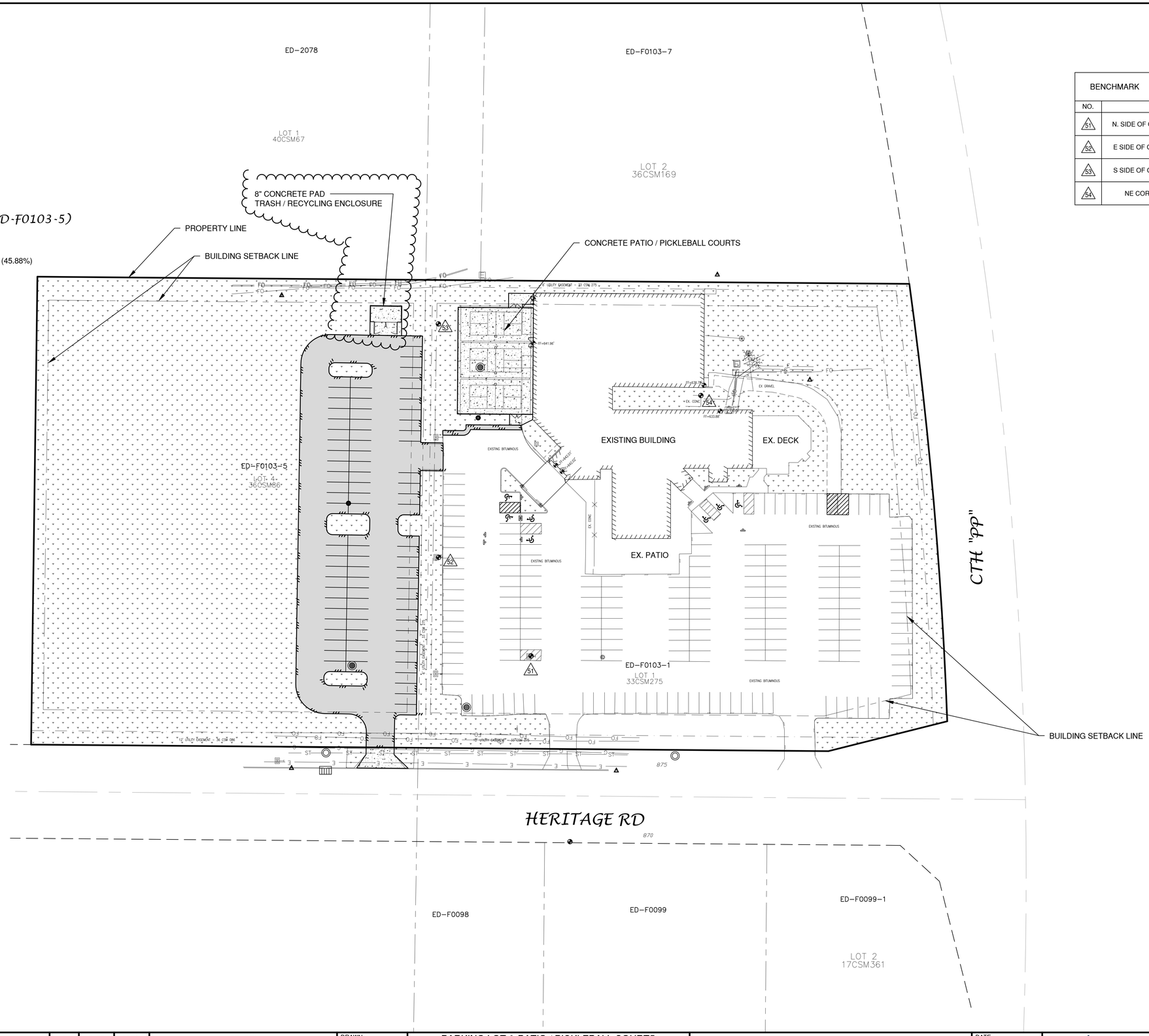

NO.	DATE	APPROV.	REVISION	NO.	DATE	APPROV.	REVISION

DRAWN PHK | CHECKED ---- | DESIGNED PHK

PARKING LOT & PATIO / PICKLEBALL COURTS
FOR CHICAGO STREET PUB / SWAN CLUB
CITY OF DE PERE
BROWN CO. WISCONSIN

OVERALL SITE PLAN

DATE 04/09/24 | FILE 4438013D | JOB NO. 4438013

Robert E. Lee & Associates, Inc.
1250 Centennial Centre Blvd | Hobart, WI | 920-662-9641 | releeinc.com

SHEET NO. C3

File: R:\4400\4438\4438013\dwg\4438013D.dwg
Plot Date: Apr 18, 2024 - 8:16pm
LAYOUT: OVERALL SITE PLAN

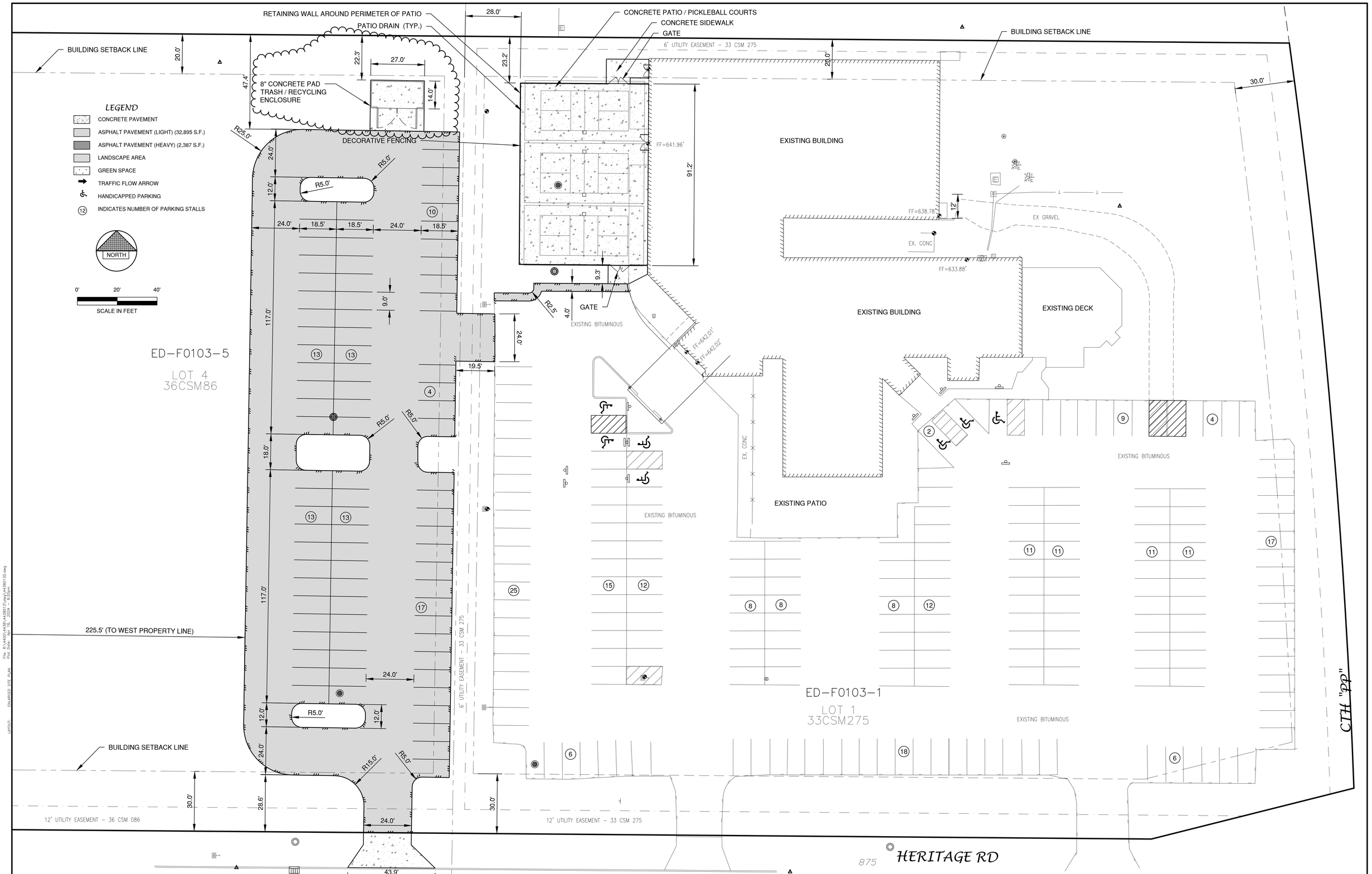

NO.	DATE	APPROV.	REVISION	NO.	DATE	APPROV.	REVISION

DRAWN PHK
CHECKED –
DESIGNED PHK

PARKING LOT & PATIO / PICKLEBALL COURTS
FOR CHICAGO STREET PUB / SWAN CLUB
CITY OF DE PERE
BROWN CO. WISCONSIN

ENLARGED SITE PLAN

DATE 04/09/24
FILE 4438013D
JOB NO. 4438013

Robert E. Lee & Associates, Inc.
1250 Centennial Centre Blvd | Hobart, WI | 920-662-9641 | releeinc.com

SHEET NO. C4

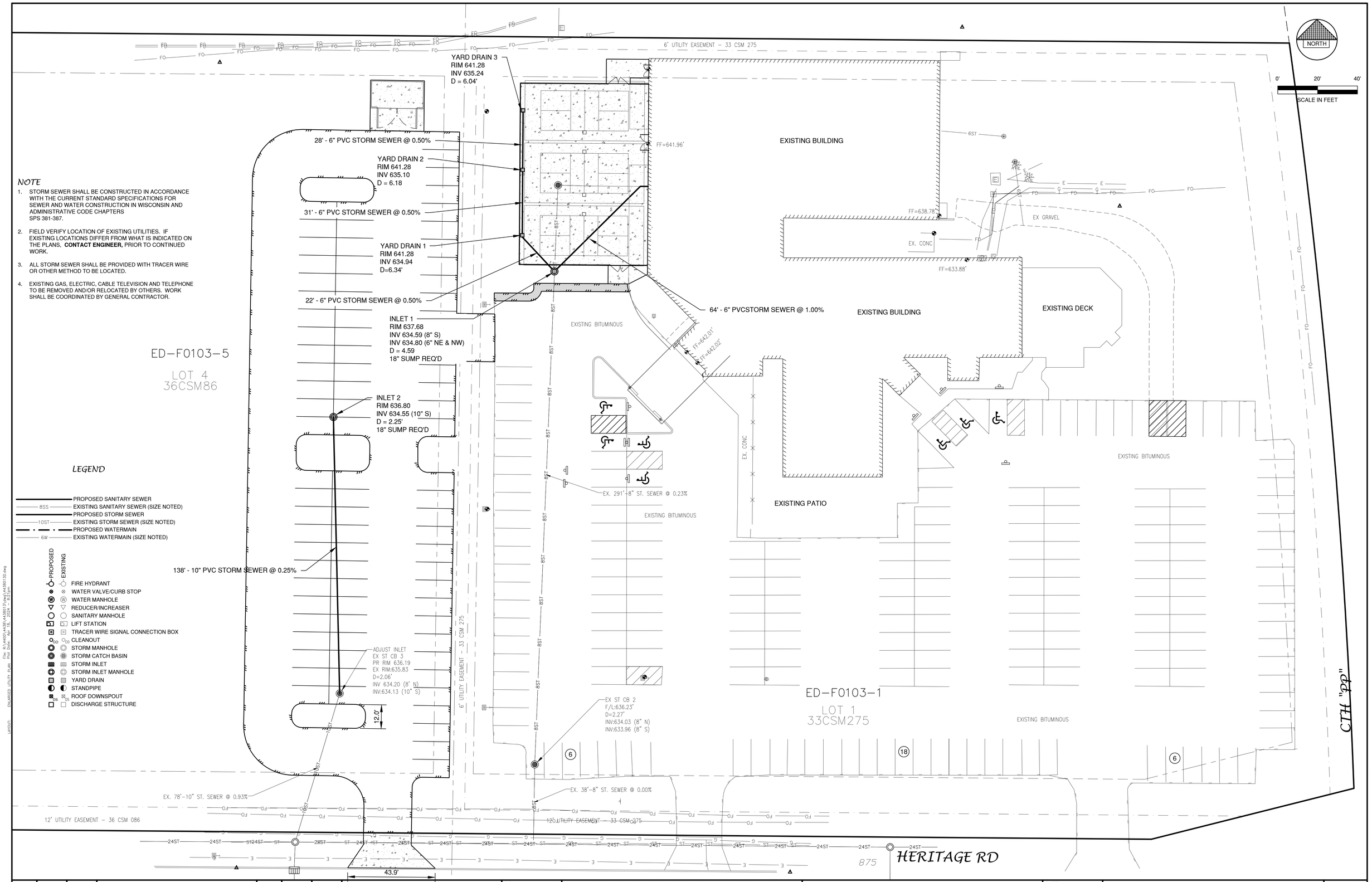

NOTE

1. STORM SEWER SHALL BE CONSTRUCTED IN ACCORDANCE WITH THE CURRENT STANDARD SPECIFICATIONS FOR SEWER AND WATER CONSTRUCTION IN WISCONSIN AND ADMINISTRATIVE CODE CHAPTERS SPS 381-387.
2. FIELD VERIFY LOCATION OF EXISTING UTILITIES. IF EXISTING LOCATIONS DIFFER FROM WHAT IS INDICATED ON THE PLANS, **CONTACT ENGINEER,** PRIOR TO CONTINUED WORK.
3. ALL STORM SEWER SHALL BE PROVIDED WITH TRACER WIRE OR OTHER METHOD TO BE LOCATED.
4. EXISTING GAS, ELECTRIC, CABLE TELEVISION AND TELEPHONE TO BE REMOVED AND/OR RELOCATED BY OTHERS. WORK SHALL BE COORDINATED BY GENERAL CONTRACTOR.

LEGEND

- PROPOSED SANITARY SEWER
- 8SS — EXISTING SANITARY SEWER (SIZE NOTED)
- PROPOSED STORM SEWER
- 10ST — EXISTING STORM SEWER (SIZE NOTED)
- PROPOSED WATERMAIN
- 6W — EXISTING WATERMAIN (SIZE NOTED)

PROPOSED	EXISTING	
		FIRE HYDRANT
		WATER VALVE/CURB STOP
		WATER MANHOLE
		REDUCER/INCREASER
		SANITARY MANHOLE
		LIFT STATION
		TRACER WIRE SIGNAL CONNECTION BOX
		CLEANOUT
		STORM MANHOLE
		STORM CATCH BASIN
		STORM INLET
		STORM INLET MANHOLE
		YARD DRAIN
		STANDPIPE
		ROOF DOWNSPOUT
		DISCHARGE STRUCTURE

File: R:\4400\4438\4438013\dwg\4438013D.dwg Plot Date: Apr 18, 2024 - 8:37pm
LAYOUT: ENLARGED UTILITY PLAN

NO.	DATE	APPROV.	REVISION	NO.	DATE	APPROV.	REVISION

DRAWN PHK
CHECKED ----
DESIGNED PHK

PARKING LOT & PATIO / PICKLEBALL COURTS
FOR CHICAGO STREET PUB / SWAN CLUB
CITY OF DE PERE
BROWN CO. WISCONSIN

ENLARGED UTILITY PLAN

DATE 04/09/24
FILE 4438013D
JOB NO. 4438013

Robert E. Lee & Associates, Inc.
1250 Centennial Centre Blvd | Hobart, WI | 920-662-9641 | releeinc.com

SHEET NO. C5

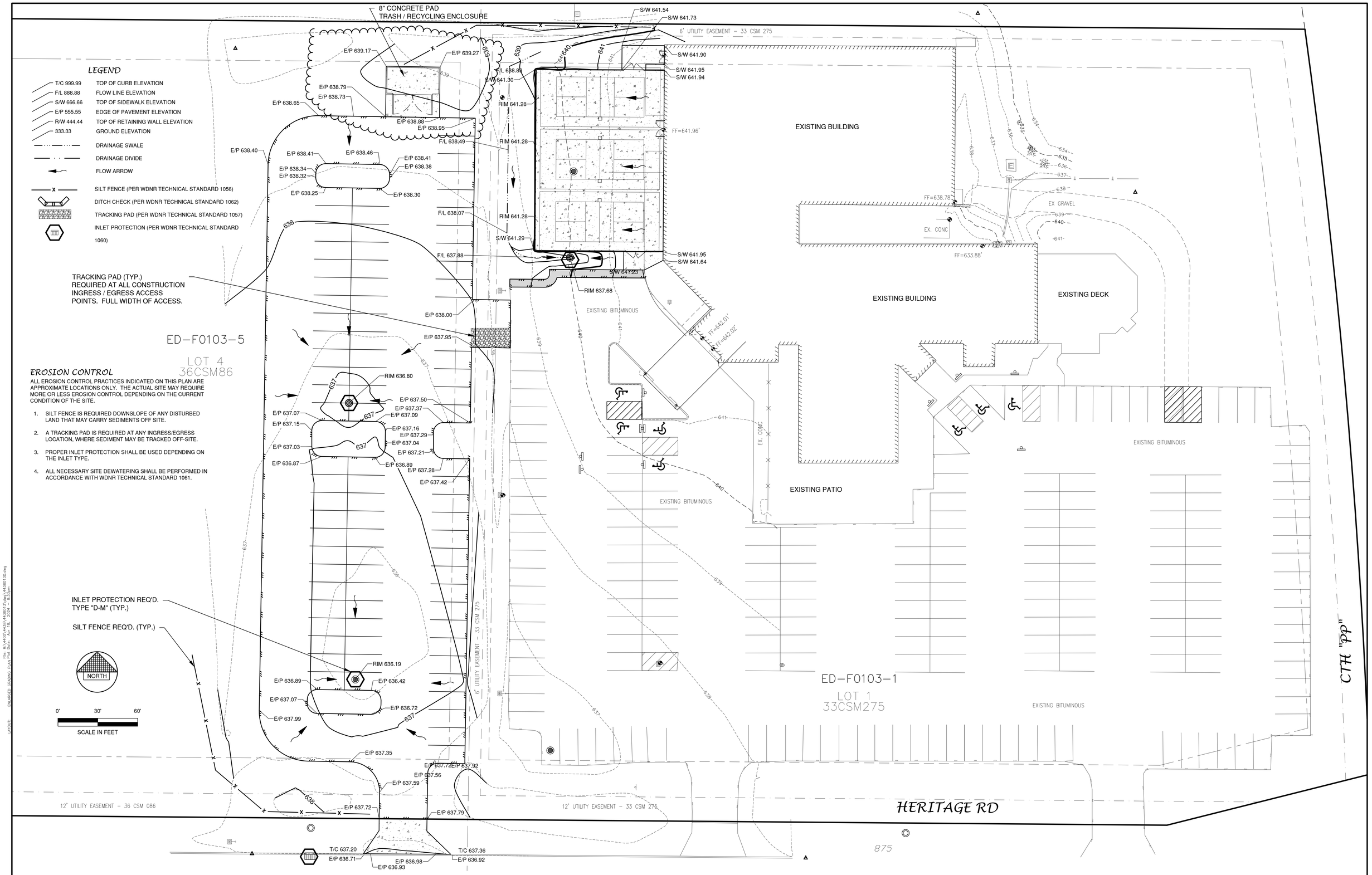

NO.	DATE	APPROV.	REVISION	NO.	DATE	APPROV.	REVISION

DRAWN PHK
CHECKED ----
DESIGNED PHK

PARKING LOT & PATIO / PICKLEBALL COURTS
FOR CHICAGO STREET PUB / SWAN CLUB
CITY OF DE PERE
BROWN CO. WISCONSIN

ENLARGED GRADING & EROSION CONTROL PLAN

DATE 04/09/24
FILE 4438013D
JOB NO. 4438013

Robert E. Lee & Associates, Inc.
1250 Centennial Centre Blvd | Hobart, WI | 920-662-9641 | releeinc.com

SHEET NO. C6

File: R:\4440\4438\4438013\dwg\4438013D.dwg
ENLARGED GRADING PLAN Plot Date: Apr 16, 2024 – 8:43pm
LAYOUT:

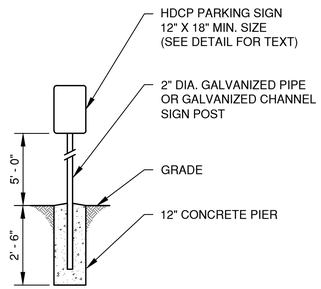

SIGN POST DETAIL

INTERNATIONAL SYMBOL
OF ACCESSIBILITY

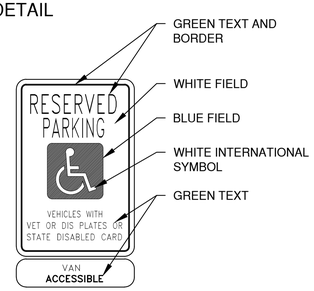

PARKING SIGN DETAIL

IT SHALL BE THE RESPONSIBILITY OF THE OWNER TO INSTALL (WHERE SHOWN HEREON), BARRIER FREE PARKING SIGNS IN CONFORMITY TO WISCONSIN ADMINISTRATIVE CODE: TRANS #200.07

ACCESSIBLE PARKING SIGN DETAIL

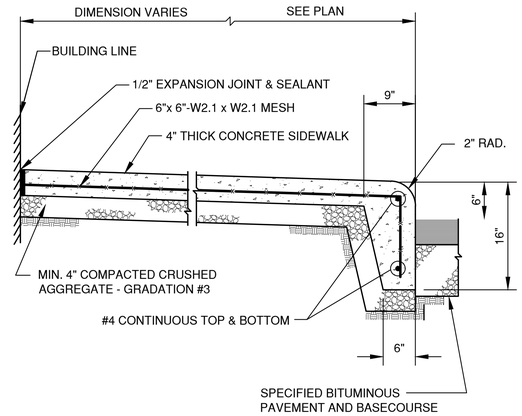

SIDEWALK WITH INTEGRAL CURB

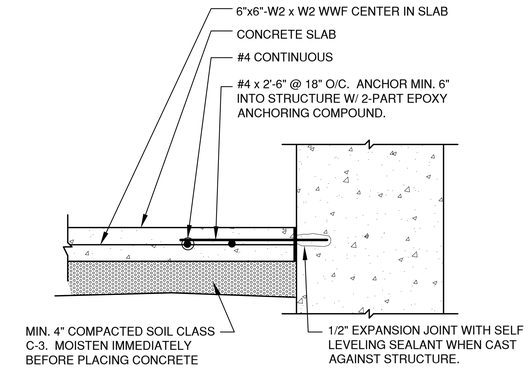

TYPICAL SIDEWALK ADJACENT
TO STRUCTURE

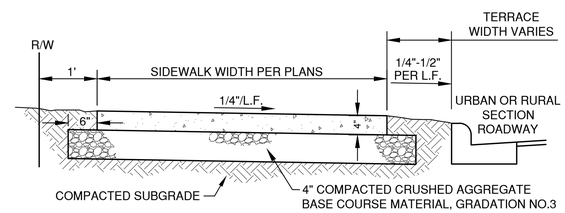

TYPICAL SECTION

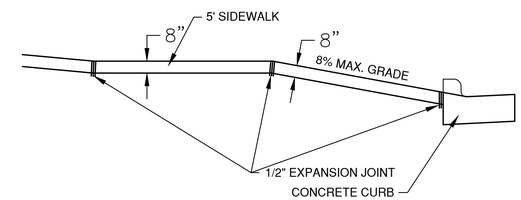

1/2" EXPANSION MATERIAL WILL BE PLACED ON EACH SIDE OF THE DRIVE ABUTTING THE SIDEWALK. SIDEWALK AND DRIVEWAY APRON SHALL BE CONSTRUCTED SEPARATELY UNLESS OTHERWISE APPROVED BY THE DIRECTOR OF PUBLIC WORKS.

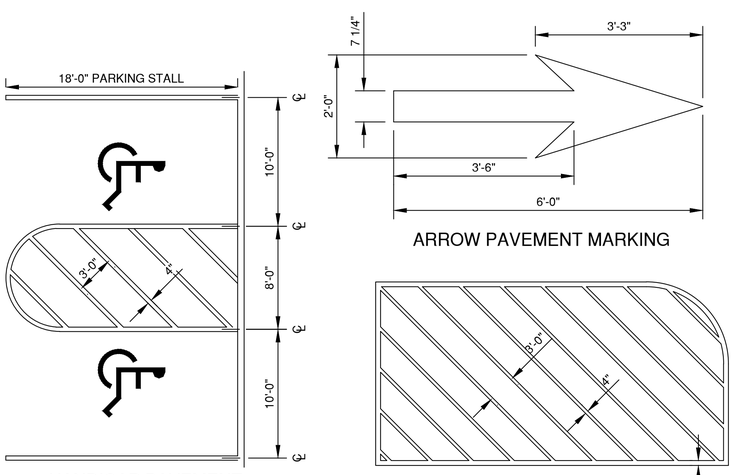

HANDICAP PAVEMENT
MARKING DETAIL

ARROW PAVEMENT MARKING

LOADING ZONE STRIPING

PAVEMENT PAINTING DETAIL

NOTE:
REFER TO SPECIFICATIONS
FOR REINFORCEMENTS.

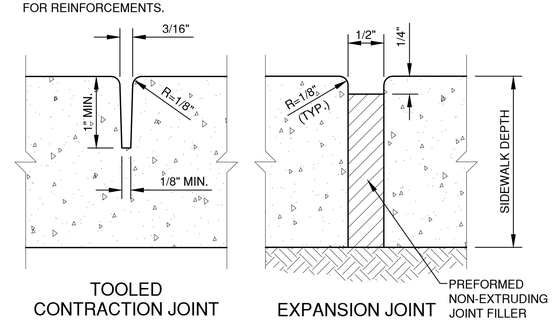

TOOLED
CONTRACTION JOINT

EXPANSION JOINT

WALK WIDTH	CONTRACTION JOINT SPACING		EXPANSION JOINT SPACING
	TRANSVERSE	LONGITUDINAL	
4'	4'	NOT REQ'D	100' MAX.
5'	5'	NOT REQ'D.	100' MAX.
6'	6'	NOT REQ'D.	100' MAX.
8'	4'	4'	100' MAX.
10'	5'	5'	100' MAX.
12'	6'	6'	100' MAX.

SIDEWALK DETAIL

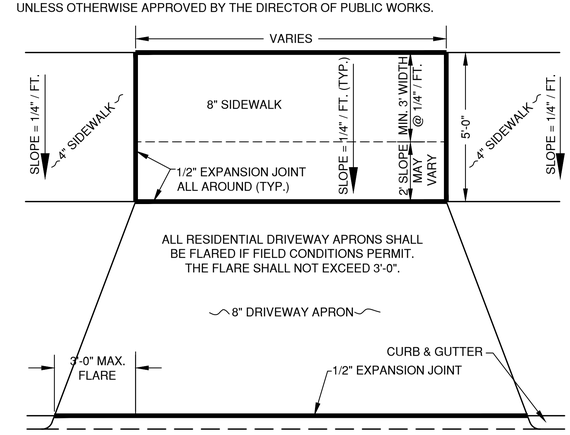

DRIVEWAY APRON DETAIL

NO.	DATE	APPROV.	REVISION	NO.	DATE	APPROV.	REVISION

DRAWN KDC
CHECKED ----
DESIGNED PHK

PARKING LOT & PATIO / PICKLEBALL COURTS
FOR CHICAGO STREET PUB / SWAN CLUB
CITY OF DE PERE
BROWN CO. WISCONSIN

MISCELLANEOUS DETAILS

DATE 03/2024
FILE 4438013DET
JOB NO. 4438013

Robert E. Lee & Associates, Inc.
1250 Centennial Centre Blvd | Hobart, WI | 920-662-9641 | releeinc.com

SHEET NO. C7

File: R:\4440\4438\4438013\dwg\4438013det.dwg
Plot Rotte Apr 20, 2024 - 8:53am
LAYOUT: DETAILS (1)

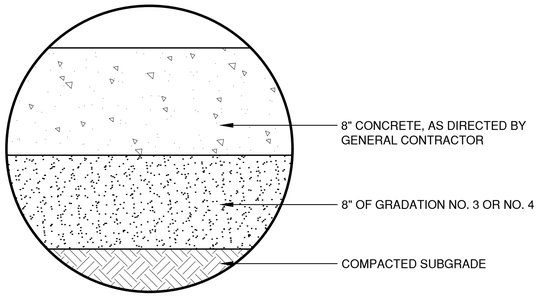

CONCRETE PAVEMENT

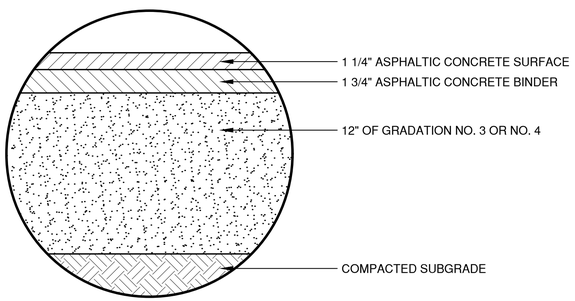

LIGHT DUTY ASPHALT PAVEMENT

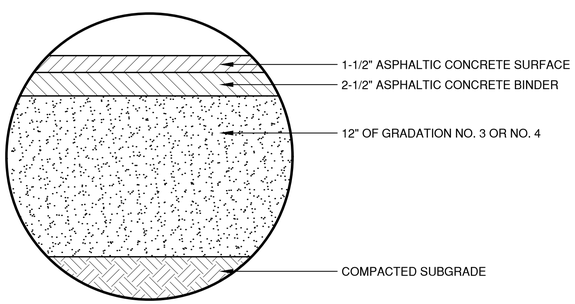

HEAVY DUTY ASPHALT PAVEMENT

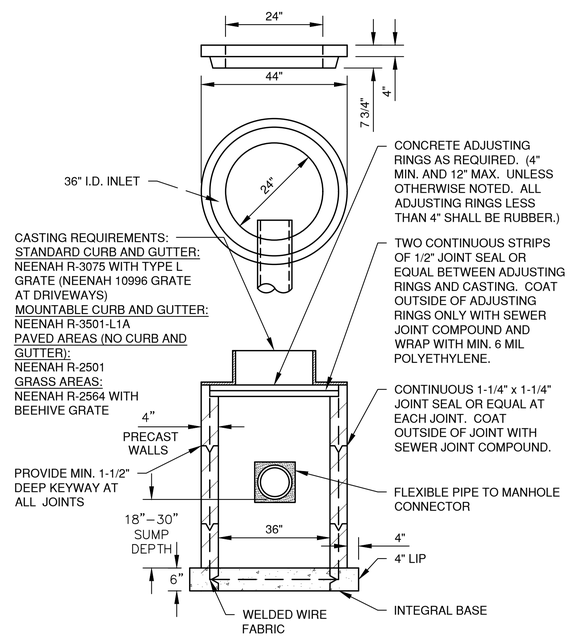

ALL PRECAST INLET UNITS SHALL CONFORM TO THE PERTINENT REQUIREMENTS OF AASHTO DESIGNATION M 199

TYPE 'A' STORM INLET

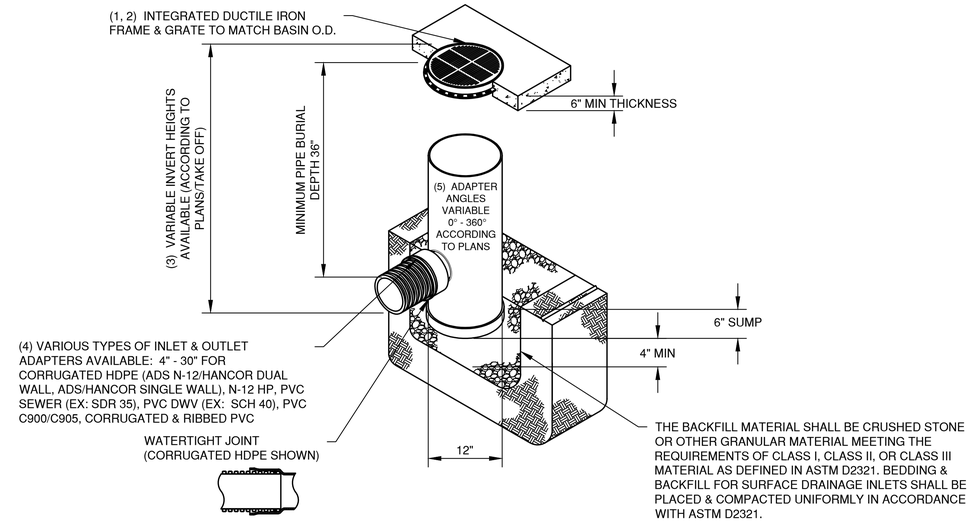

1 - 12" PEDESTRIAN GRATES SHALL BE DUCTILE IRON PER ASTM A536 GRADE 70-50-05.
2 - 12" FRAMES SHALL BE DUCTILE IRON PER ASTM A536 GRADE 70-50-05.
3 - DRAIN BASIN TO BE CUSTOM MANUFACTURED ACCORDING TO PLAN DETAILS. RISERS ARE NEEDED FOR BASINS OVER 84" DUE TO SHIPPING RESTRICTIONS. SEE DRAWING NO. 7001-110-065.
4 - DRAINAGE CONNECTION STUB JOINT TIGHTNESS SHALL CONFORM TO ASTM D3212 FOR CORRUGATED HDPE (ADS N-12/HANCOR DUAL WALL), N-12 HP, & PVC SEWER (4" - 24").
5 - ADAPTERS CAN BE MOUNTED 0° TO 360°. TO DETERMINE MINIMUM ANGLE BETWEEN ADAPTERS SEE DRAWING NO. 7001-110-012.
6 - 12" PEDESTRIAN GRATES SHALL MEET H-10 LOAD RATING.

12 INCH NYLOPLAST YARD DRAIN BASIN WITH PEDESTRIAN GRATE

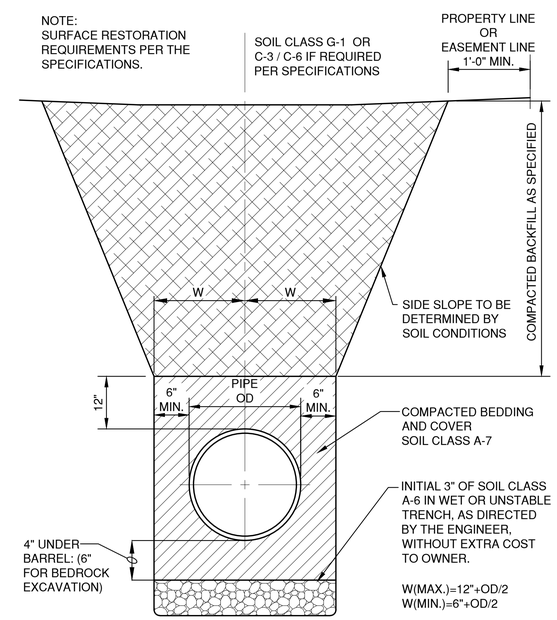

HDPE /PVC SEWER, WATERMAIN AND FORCEMAIN BEDDING AND TRENCH DETAIL

NO.	DATE	APPROV.	REVISION	NO.	DATE	APPROV.	REVISION

DRAWN KDC
CHECKED ----
DESIGNED PHK

PARKING LOT & PATIO / PICKLEBALL COURTS
FOR CHICAGO STREET PUB / SWAN CLUB
CITY OF DE PERE
BROWN CO. WISCONSIN

MISCELLANEOUS DETAILS

DATE 03/2024
FILE 4438013DET
JOB NO. 4438013

Robert E. Lee & Associates, Inc.
1250 Centennial Centre Blvd | Hobart, WI | 920-662-9641 | releeinc.com

SHEET NO. C8

File: R:\4400\4438\4438013\dwg\4438013Det.dwg
Plot Date: Apr 09, 2024 - 10:07am
LAYOUT: DETAILS (2)

NOTES:

1. TAPER BOTTOM OF BAG TO MAINTAIN THREE INCHES OF CLEARANCE BETWEEN THE BAG AND THE STRUCTURE, MEASURED FROM THE BOTTOM OF THE OVERFLOW OPENINGS TO THE STRUCTURE WALL.
2. GEOTEXTILE FABRIC TYPE FF FOR FLAPS AND TOP HALF OF FILTER BAG. GEOTEXTILE FABRIC TYPE HR FOR BOTTOM HALF OF FILTER BAG. FRONT, BACK AND BOTTOM OF FILTER BAG BEING ONE PIECE.
3. FRONT LIFTING FLAP IS TO BE USED WHEN REMOVING AND MAINTAINING FILTER BAG.
4. SIDE FLAPS SHALL BE A MAXIMUM OF TWO INCHES LONG. FOLD THE FABRIC OVER AND REINFORCE WITH MULTIPLE STITCHES.
5. FLAP POCKETS SHALL BE LARGE ENOUGH TO ACCEPT WOOD 2" X 4". THE REBAR, STEEL PIPE, OR WOOD SHALL BE INSTALLED IN THE REAR FLAP AND SHALL NOT BLOCK THE TOP HALF OF THE CURB FACE OPENING.

MAINTENANCE NOTES:

WHEN REMOVING OR MAINTAINING INLET PROTECTION, CARE SHALL BE TAKEN SO THAT THE SEDIMENT TRAPPED IN THE FABRIC DOES NOT FALL INTO THE STRUCTURE. MATERIAL THAT HAS FALLEN INTO THE INLET SHALL BE IMMEDIATELY REMOVED.

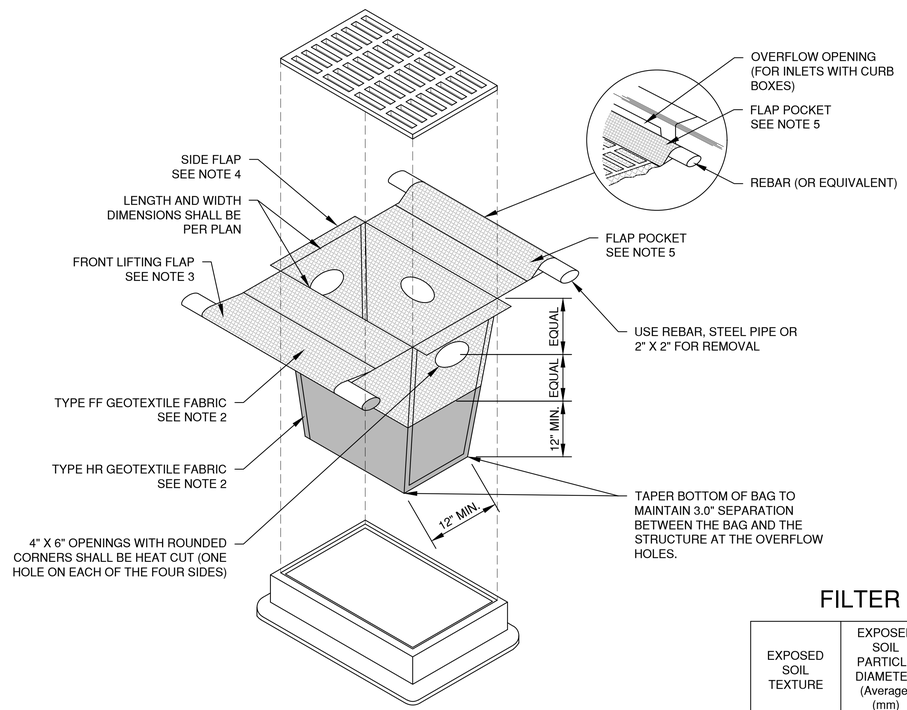

INLET PROTECTION, TYPE D-HR

(CAN BE INSTALLED IN INLETS WITH OR WITHOUT CURB BOXES)

NOTES:

1. TAPER BOTTOM OF BAG TO MAINTAIN THREE INCHES OF CLEARANCE BETWEEN THE BAG AND THE STRUCTURE, MEASURED FROM THE BOTTOM OF THE OVERFLOW OPENINGS TO THE STRUCTURE WALL.
2. GEOTEXTILE FABRIC TYPE FF FOR FLAPS, TOP AND BOTTOM OF OUTSIDE OF FILTER BAG. FRONT, BACK AND BOTTOM OF FILTER BAG BEING ONE PIECE.
3. FRONT LIFTING FLAP IS TO BE USED WHEN REMOVING AND MAINTAINING FILTER BAG.
4. SIDE FLAPS SHALL BE A MAXIMUM OF TWO INCHES LONG. FOLD THE FABRIC OVER AND REINFORCE WITH MULTIPLE STITCHES.
5. FLAP POCKETS SHALL BE LARGE ENOUGH TO ACCEPT WOOD 2" X 4". THE REBAR, STEEL PIPE, OR WOOD SHALL BE INSTALLED IN THE REAR FLAP AND SHALL NOT BLOCK THE TOP HALF OF THE CURB FACE OPENING.

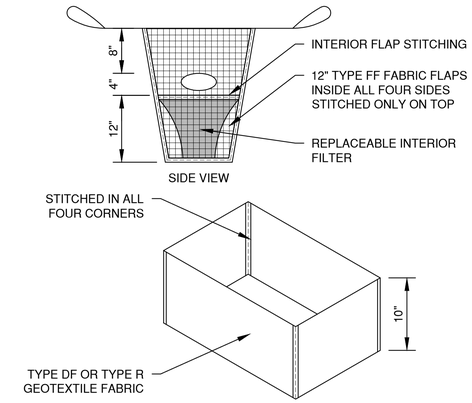

REPLACEABLE INTERIOR FILTER

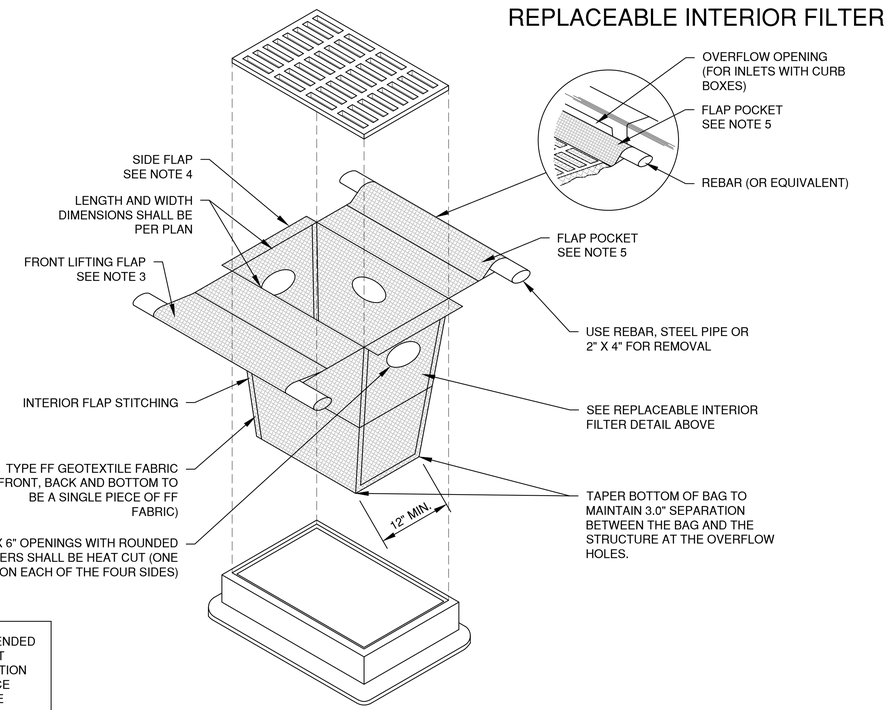

INLET PROTECTION, TYPE D-M

(CAN BE INSTALLED IN INLETS WITH OR WITHOUT CURB BOXES)

FILTER FABRIC TYPE

EXPOSED SOIL TEXTURE	EXPOSED SOIL PARTICLE DIAMETER (Average) (mm)	FILTER FABRIC TYPE*	RECOMMENDED INLET PROTECTION DEVICE TYPE
COARSE (SAND)	≥0.0625	FF	D, D-M
MEDIUM (SILT LOAM)	0.0624 - 0.005	DF	D, D-M
FINE (CLAY)	≤ 0.004	R	D-M
		HR	D-HR

* DF, R OR HR FILTERS MAY BE USED WHERE FF IS THE REQUIRED MINIMUM STANDARD. R OR HR MAY BE USED WHERE DF IS THE REQUIRED MINIMUM STANDARD.

** FOLLOW DESIGN CRITERIA OF WDNR TECHNICAL STANDARD 1060

NO.	DATE	APPROV.	REVISION	NO.	DATE	APPROV.	REVISION

DRAWN KDC
CHECKED ----
DESIGNED PHK

PARKIN LOT & PATIO / PICKLEBALL COURTS
FOR CHICAGO STREET PUB / SWAN CLUB
CITY OF DE PERE
BROWN CO. WISCONSIN

EROSION CONTROL
INLET PROTECTION
TYPE D-HR AND TYPE D-M

DATE 04/09/24
FILE 4438013EC
JOB NO. 4438013

Robert E. Lee & Associates, Inc.
1250 Centennial Centre Blvd | Hobart, WI | 920-662-9641 | releeinc.com

SHEET NO. C9

File: R:\4400\4438\4438013\dwg\4438013EC.dwg
Plot Date: Apr 09, 2024 - 10:23am
LAYOUT: 2-INLET PROTECTION

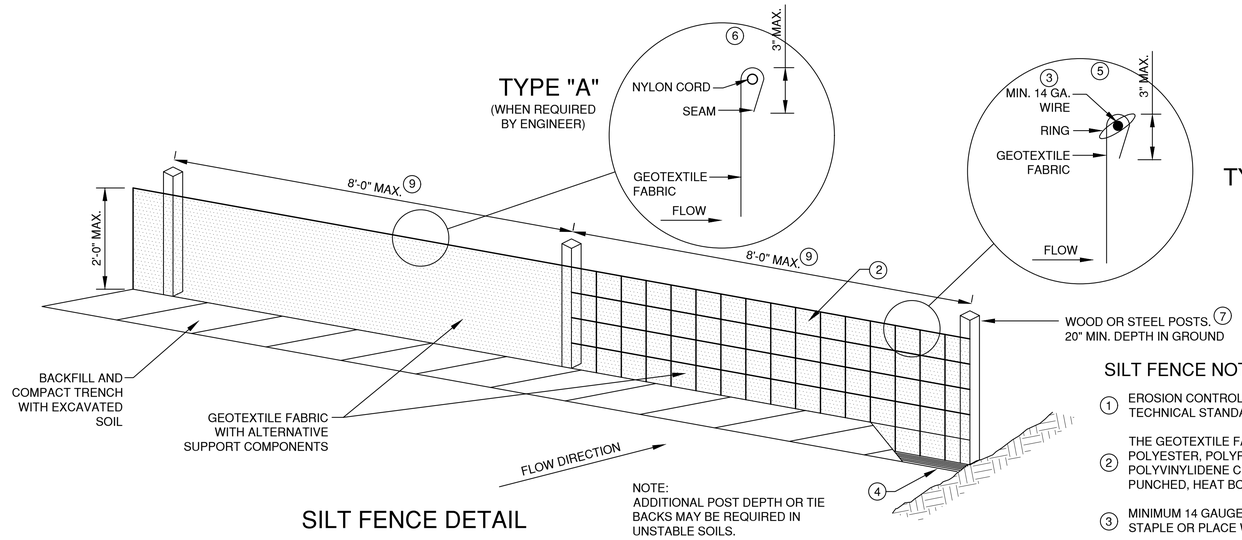

NOTE:
ADDITIONAL POST DEPTH OR TIE BACKS MAY BE REQUIRED IN UNSTABLE SOILS.

SILT FENCE DETAIL

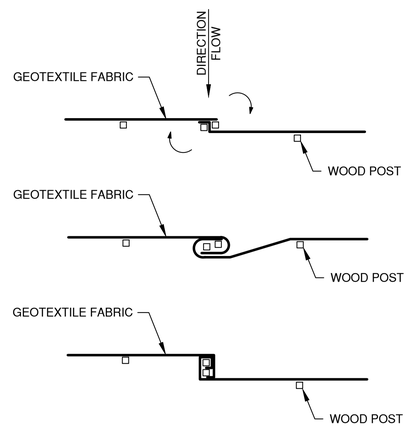

TWIST METHOD 8

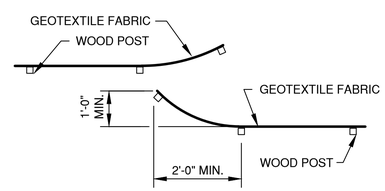

HOOK METHOD 8

JOINING TWO LENGTHS OF SILT FENCE

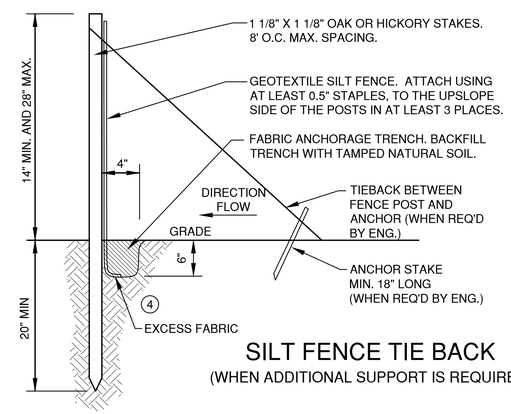

SILT FENCE TIE BACK

(WHEN ADDITIONAL SUPPORT IS REQUIRED)

SILT FENCE NOTES:

1. EROSION CONTROL SHALL BE PROVIDED IN ACCORDANCE WITH WDNR TECHNICAL STANDARD 1056.
2. THE GEOTEXTILE FABRIC CONSISTS OF EITHER WOVEN OR NON-WOVEN POLYESTER, POLYPROPYLENE, STABILIZED NYLON,POLYETHYLENE OR POLYVINYLIDENE CHLORIDE. NON-WOVEN FABRIC MAY BE NEEDLE PUNCHED, HEAT BONDED, RESIN BONDED, OR COMBINATIONS THEREOF.
3. MINIMUM 14 GAUGE WIRE REQUIRED, FOLD FABRIC 3" OVER THE WIRE AND STAPLE OR PLACE WIRE RINGS ON 12" C.C.
4. EXCAVATE A TRENCH A MINIMUM OF 4" WIDE AND 6" DEEP TO BURY AND ANCHOR THE GEOTEXTILE FABRIC. FOLD MATERIAL TO FIT TRENCH AND BACKFILL AND COMPACT TRENCH WITH EXCAVATED SOIL
5. WIRE SUPPORT FENCE SHALL BE 14 GAUGE MINIMUM WOVEN WIRE WITH A MAXIMUM MESH SPACING OF 6". SECURE TOP OF GEOTEXTILE FABRIC TO TOP OF FENCE WITH STAPLES OR WIRE RINGS AT 12" C.C. (TYPE B)
6. GEOTEXTILE FABRIC SHALL BE REINFORCED WITH AN INDUSTRIAL POLYPROPYLENE NETTING WITH A MAXIMUM MESH SPACING OF 3/4" OR EQUAL. A HEAVY DUTY NYLON TOP SUPPORT CORD OR EQUIVALENT IS REQUIRED. (TYPE A)
7. STEEL POSTS SHALL BE 5' LONG WITH A MINIMUM STRENGTH OF 1.33 LBS PER FOOT. WOOD POSTS SHALL BE A MINIMUM SIZE OF 1 1/8" X 1 1/8" OF OAK OR HICKORY. THE POSTS SHALL BE A MINIMUM OF 3' LONG FOR 24" SILT FENCE AND 4' LONG FOR 36" SILT FENCE.
8. CONSTRUCT SILT FENCE FROM A CONTINUOUS ROLL, IF POSSIBLE, BY CUTTING LENGTHS TO AVOID JOINTS. IF A JOINT IS NECESSARY, USE ONE OF THE FOLLOWING TWO METHODS: A.) TWIST METHOD -- OVERLAP THE END POSTS AND TWIST, OR ROTATE, AT LEAST 180 DEGREES, B:) HOOK METHOD -- HOOK THE END OF EACH SILT FENCE LENGTH.
9. THE MAXIMUM SPACING OF POSTS FOR WOVEN FABRIC SILT FENCE SHALL BE 8 FEET AND FOR NON-WOVEN FABRIC, 3 FEET.

EROSION CONTROL SHEET FLOW NOTES:

1. ANY SOIL STOCKPILED THAT REMAINS FOR MORE THAN 7 DAYS, SHALL BE COVERED OR TREATED WITH STABILIZATION PRACTICES SUCH AS TEMPORARY OR PERMANENT SEEDING AND MULCHING.
2. A MINIMUM OF 4" OF TOPSOIL MUST BE APPLIED TO ALL AREAS TO BE SEEDED OR SODDED.
3. ALL WASTE AND UNUSED BUILDING MATERIALS (INCLUDING GARBAGE, DEBRIS, CLEANING WASTES, WASTEWATER, TOXIC MATERIALS, OR HAZARDOUS MATERIALS) SHALL BE PROPERLY DISPOSED OF AND NOT ALLOWED TO BE CARRIED OFF-SITE BY RUNOFF OR WIND.
4. ALL OFF-SITE SEDIMENT DEPOSITS OCCURRING AS A RESULT OF CONSTRUCTION WORK OR A STORM EVENT SHALL BE CLEANED UP BY THE END OF EACH DAY. **FLUSHING SHALL NOT BE ALLOWED.**
5. ANY SOIL EROSION THAT OCCURS AFTER FINAL GRADING AND/OR THE APPLICATION OF STABILIZATION MEASURES MUST BE REPAIRED AND THE STABILIZATION WORK REDONE.
6. FOR ANY DISTURBED AREA THAT REMAINS INACTIVE FOR GREATER THAN 7 WORKING DAYS, OR WHERE GRADING WORK EXTENDS BEYOND THE PERMANENT SEEDING DEADLINES, THE SITE MUST BE TREATED WITH TEMPORARY STABILIZATION MEASURES SUCH AS SOIL TREATMENT, TEMPORARY SEEDING AND/OR MULCHING.
7. ALL TEMPORARY EROSION CONTROL PRACTICES SHALL BE MAINTAINED UNTIL THE SITE IS STABILIZED WITH 70% VEGETATION AND A NOTICE OF TERMINATION HAS BEEN APPROVED BY THE WDNR.
8. WIND EROSION SHALL BE KEPT TO A MINIMUM DURING CONSTRUCTION. WATERING, MULCH OR A TACKING AGENT MAY NEED TO BE UTILIZED TO PROTECT NEARBY RESIDENCES/WATER RESOURCES.
9. CONTRACTOR IS RESPONSIBLE FOR MAINTAINING ALL THE EROSION CONTROL MEASURES IN CONFORMANCE WITH THE WDNR CONSERVATION PRACTICE STANDARDS LATEST EDITION.
10. UPON COMPLETION OF STORM INLET CONSTRUCTION, INSTALL STORM DRAIN INLET PROTECTION FOR CONSTRUCTION SITE AS SPECIFIED.
11. FINE SEDIMENT ACCUMULATIONS SHALL BE CLEANED FROM STREETS, PRIVATE DRIVES, OR PARKING AREAS BY MANUAL OR MECHANICAL SWEEPING A MINIMUM OF ONCE A WEEK AND BEFORE ALL IMMINENT RAINS
12. EROSION AND SEDIMENT CONTROL STRUCTURES SHALL BE INSPECTED WEEKLY AND WITHIN 24 HOURS OF RAINFALL OF 0.5" OR MORE.

File: R:\4400\4438\4438013\dwg\4438013EC.dwg
Plot Date: Apr 05, 2024 - 10:22am
LAYOUT: 4 SHEET FLOW

NO.	DATE	APPROV.	REVISION	NO.	DATE	APPROV.	REVISION

DRAWN KDC
CHECKED ----
DESIGNED PHK

PARKIN LOT & PATIO / PICKLEBALL COURTS
FOR CHICAGO STREET PUB / SWAN CLUB
CITY OF DE PERE
BROWN CO. WISCONSIN

EROSION CONTROL
SHEET FLOW DETAILS

DATE 04/09/24
FILE 4438013EC
JOB NO. 4438013

Robert E. Lee & Associates, Inc.
1250 Centennial Centre Blvd | Hobart, WI | 920-662-9641 | releeinc.com

SHEET NO. C10

* TRACKOUT CONTROL TO BE PROVIDED PER DETAILS BELOW AND IN ACCORDANCE WITH WDNR TECHNICAL STANDARD 1057

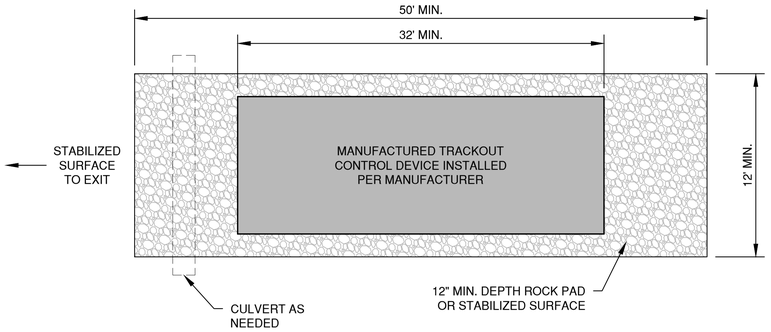

PLAN VIEW
(NTS)

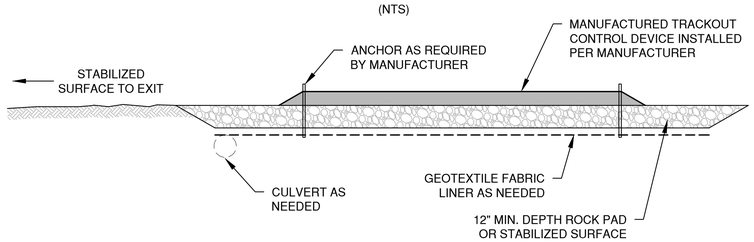

SECTION VIEW

NOTES:

1. THIS DETAIL IS PROVIDED AS AN EXAMPLE. COMPLY WITH MANUFACTURER'S SPECIFICATIONS WHILE ALSO MEETING THE MINIMUM MANUFACTURED TRACKING PAD LENGTH AND WIDTH DESCRIBED IN THIS TECHNICAL STANDARD.
2. INSTALL SUCH THAT RUNOFF FLOWS TO AN APPROVED TREATMENT PRACTICE.
3. A THINNER STONE LAYER OR OTHER STABLE SURFACE MAY BE ACCEPTABLE SUCH THAT RUTTING IS MINIMIZED AS VEHICLES MOUNT OR DISMOUNT FROM THE MANUFACTURERS TRACKOUT CONTROL DEVICE.
4. SELECT FABRIC TYPE BASED ON SOIL CONDITIONS AND VEHICLES LOADING.
5. DIRECT ALL EXISTING VEHICLES OVER MANUFACTURED TRACKOUT CONTROL DEVICE. STONE TRACKING PAD INSTALLATION ACROSS REMAINING ACCESS WIDTH IS RECOMMENDED. A 12' MINIMUM CAN BE USED WHEN EXITING TRAFFIC IS RESTRICTED TO A DEDICATED EGRESS LANE.
6. IF MINIMUM INSTALLATION LENGTH IS NOT POSSIBLE DUE TO SITE GEOMETRY, INSTALL THE MAXIMUM LENGTH PRACTICABLE AND SUPPLEMENT WITH ADDITIONAL PRACTICES AS NEEDED.
7. ACCOMMODATE EXITING VEHICLES IN EXCESS OF MANUFACTURED TRACKOUT CONTROL DEVICE WEIGHT CAPACITY WITH OTHER TREATMENT PRACTICES.

MANUFACTURED TRACKOUT CONTROL DETAIL

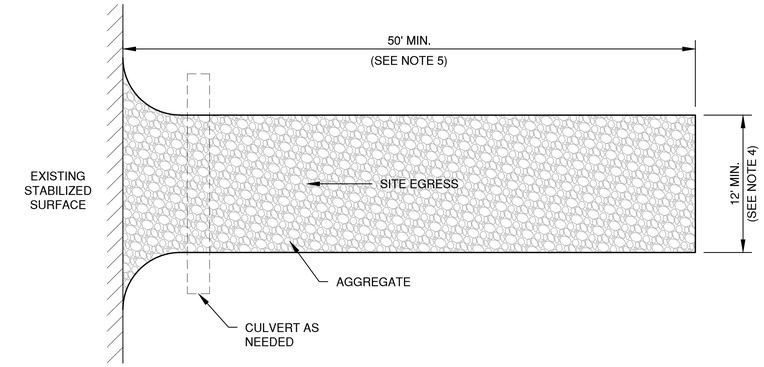

PLAN VIEW
(NTS)

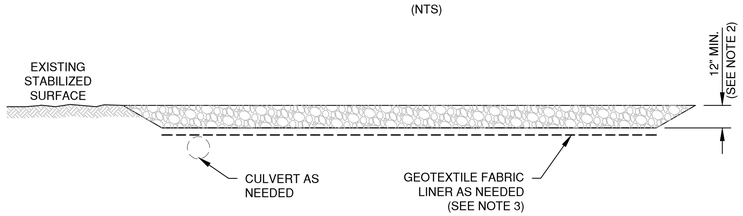

SECTION VIEW

NOTES:

1. USE HARD, DURABLE, ANGULAR STONE OR RECYCLED CONCRETE, MEETING THE FOLLOWING GRADATION:

SIEVE SIZE:	PERCENT BY WEIGHT PASSING:
3"	100
2 1/2"	90-100
1 1/2"	25-60
3/4"	0-20
3/8"	0-5

2. SLOPE THE STONE TRACKING PAD IN A MANNER TO DIRECT RUNOFF TO AN APPROVED TREATMENT PRACTICE.
3. SELECT FABRIC TYPE BASED ON SOIL CONDITIONS AND VEHICLES LOADING.
4. INSTALL TRACKING PAD ACROSS FULL WIDTH OF THE ACCESS POINT, OR RESTRICT EXISTING TRAFFIC TO A DEDICATED EGRESS LANE AT LEAST 12 FEET WIDE ACROSS THE TOP OF THE PAD.
5. IF A 50' PAD LENGTH IS NOT POSSIBLE DUE TO SITE GEOMETRY, INSTALL THE MAXIMUM LENGTH PRACTICABLE AND SUPPLEMENT WITH ADDITIONAL PRACTICES AS NEEDED.

STONE TRACKING PAD DETAIL

File: R:\4400\4438\4438013\dwg\4438013EC.dwg
Plot Date: Apr 09, 2024 - 10:22am
LAYOUT: S TRACKOUT

NO.	DATE	APPROV.	REVISION	NO.	DATE	APPROV.	REVISION

DRAWN KDC
CHECKED ----
DESIGNED PHK

PARKIN LOT & PATIO / PICKLEBALL COURTS
FOR CHICAGO STREET PUB / SWAN CLUB
CITY OF DE PERE
BROWN CO. WISCONSIN

EROSION CONTROL
TRACKOUT CONTROL PRACTICES

DATE 04/09/24
FILE 4438013EC
JOB NO. 4438013

Robert E. Lee & Associates, Inc.
1250 Centennial Centre Blvd | Hobart, WI | 920-662-9641 | releeinc.com

SHEET NO. C11

LANDSCAPE PLAN

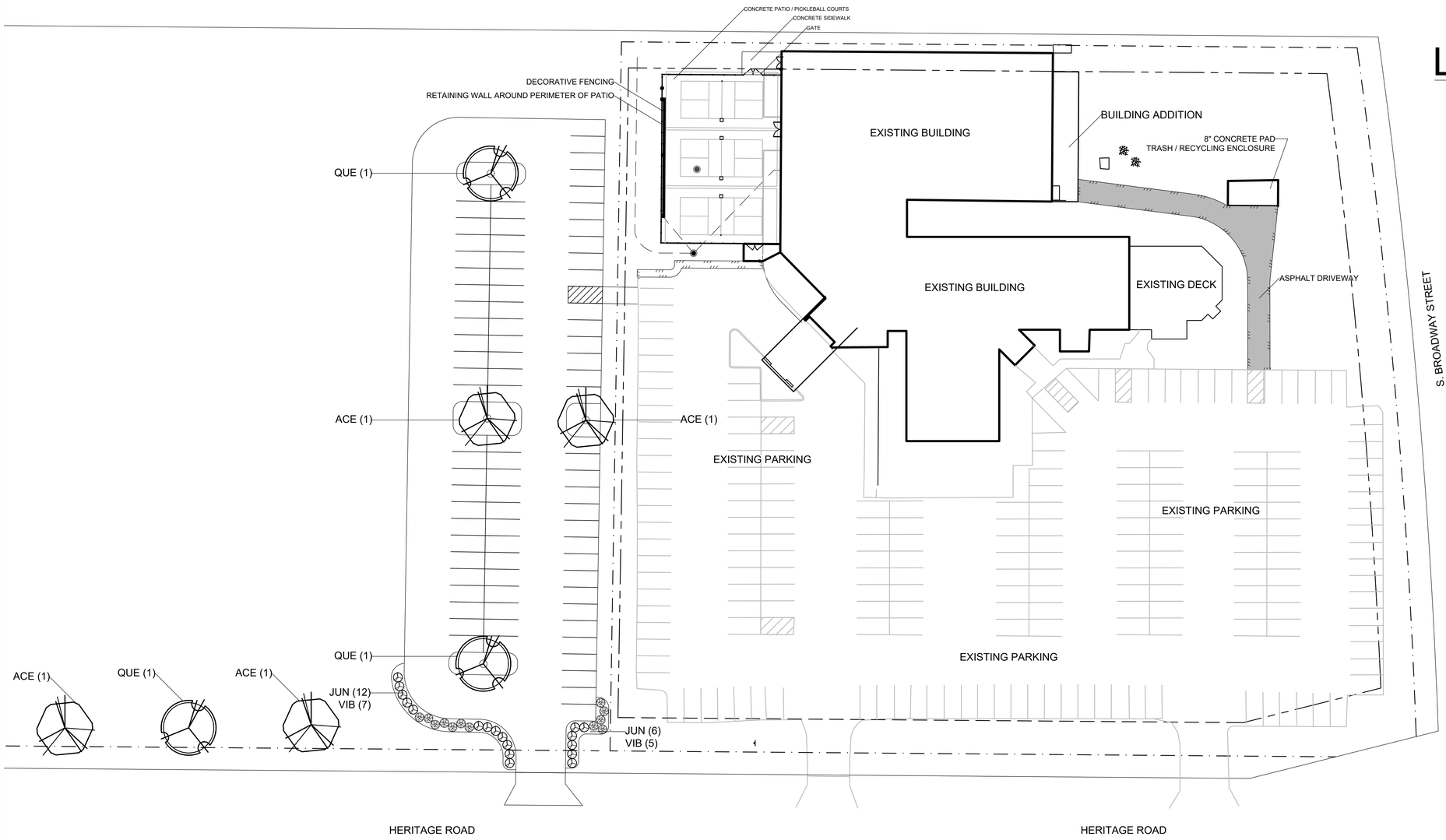

0 20 30 40 60

1" = 30'

LANDSCAPE REQUIREMENTS:

PARKING LOT SCREENING: PARKING LOT SCREENING AREAS MUST BE AT LEAST 7 FEET IN WIDTH. A VEGETATIVE SCREEN CONSISTING OF SHRUBS PLANTED TO CREATE A CONTINUOUS VISUAL BARRIER AT LEAST 3' IN HEIGHT.

PARKING LOT INTERIOR LANDSCAPING: REQUIRED PARKING LOT INTERIOR LANDSCAPE AREAS MUST INCLUDE AT LEAST ONE LARGE TREE PER 20 PARKING SPACES.

85 ADDITIONAL PARKING SPACES / 20 = 4 TREES REQUIRED
4 TREES PROVIDED

PLANT LEGEND:

- MAPLE 'OCTOBER GLORY'
- OAK 'SWAMP WHITE'
- JUNIPER 'GREY OWL'
- VIBURNUM 'KOREAN SPICE'

LANDSCAPE INSTALLATION NOTES:

GENERAL:
-Landscape contractor is responsible for coordinating work with general contractor to ensure the landscape scope of work doesn't interfere with existing or built conditions. They should note any discrepancies to the general contractor.

-Landscape contractor is responsible for verifying the location of underground utilities by calling their local utility marking service.

-All plant material should be inspected by Landscape Contractor prior to installation to determine overall appearance and condition. Plant material that is damaged or has clear signs of stress should be rejected.

-Quantities of material shown on plan take precedence over the specification list or legend.

-If plant substitutions are required, Landscape Contractor is responsible for submitting recommendations to the client or client's representative.

PLANTING:
-When excavating for plant pits, any excess rock or building material should be removed an replaced with specified soil mix backfill.

-All plant tags should be removed from material by landscape contractor.

-All planting beds should receive a minimum 3" deep layer of shredded hardwood mulch, unless otherwise noted.

-Edge all beds with a spade cut edge unless otherwise noted.

-All backfill around plant material rootballs should receive a soil mix of 4 parts (pulverized) topsoil to 1 part fine, organic compost.

-All wire baskets and stakes should be removed during planting.

-Cut and remove top half of burlap around rootballs and cut and remove any twine around trunk or root flare.

-All stakes and guy wires and tree wrap are to be removed no more than 1 year after installation.

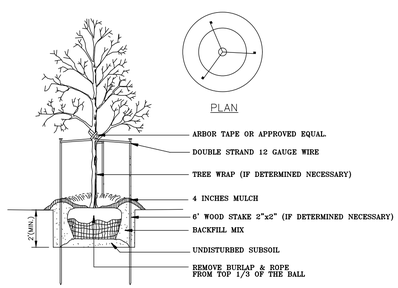

NOTE: USE MULCH PER PLAN/SPEC'S

TREE PLANTING

N.T.S.

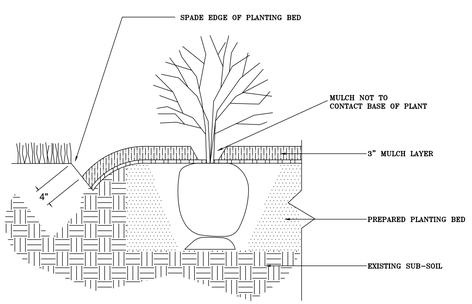

SPADE-CUT EDGE DETAIL

N.T.S.

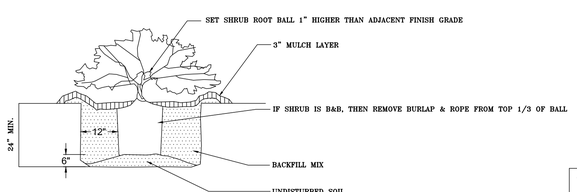

PRUNE ANY BROKEN BRANCHES AFTER PLANTING. DAMAGED SHRUBS OR BROKEN/CRUMBLING ROOT BALLS WILL BE REJECTED.

SHRUB PLANTING

N.T.S.

PLANT SCHEDULE

TREES	QTY	COMMON NAME / BOTANICAL NAME	SIZE
ACE	6	Acer rubrum 'October Glory'	2"
QUE	5	Quercus bicolor 'Swamp White'	2"
SHRUBS / PERENNIALS	QTY	COMMON NAME / BOTANICAL NAME	SIZE
JUN	13	Juniperus virginiana 'Grey Owl'	3' BB
VIB	11	Viburnum carlesii 'Korean Spice'	3' BB

elevate outdoor

Elevate Outdoor LLC.
1112 Bryan Road
O'Fallon, Missouri 63366
636-946-1313
info@elevate-outdoor.com
www.elevate-outdoor.com

Swan Club
875 Heritage Road
De Pere, Wisconsin 54115

This drawing is conceptual and is only to be used as a guide for construction. The completed project may differ from this plan in appearance and dimension.

This drawing is the instrument of service and the intellectual property of Elevate Outdoor. This plan is not to be reproduced, changed, or copied in any matter, nor is it to be assigned to any third party. Use of this plan or any of its elements without written permission and consent of Elevate Outdoor is expressly prohibited.

Drawing Completed:
3-6-2024
3-26-2024
4-19-2024

Landscape Plan

L-1

CHICAGO STYLE PUB ADDITION / REMODEL
875 HERITAGE ROAD
DE PERE, WI

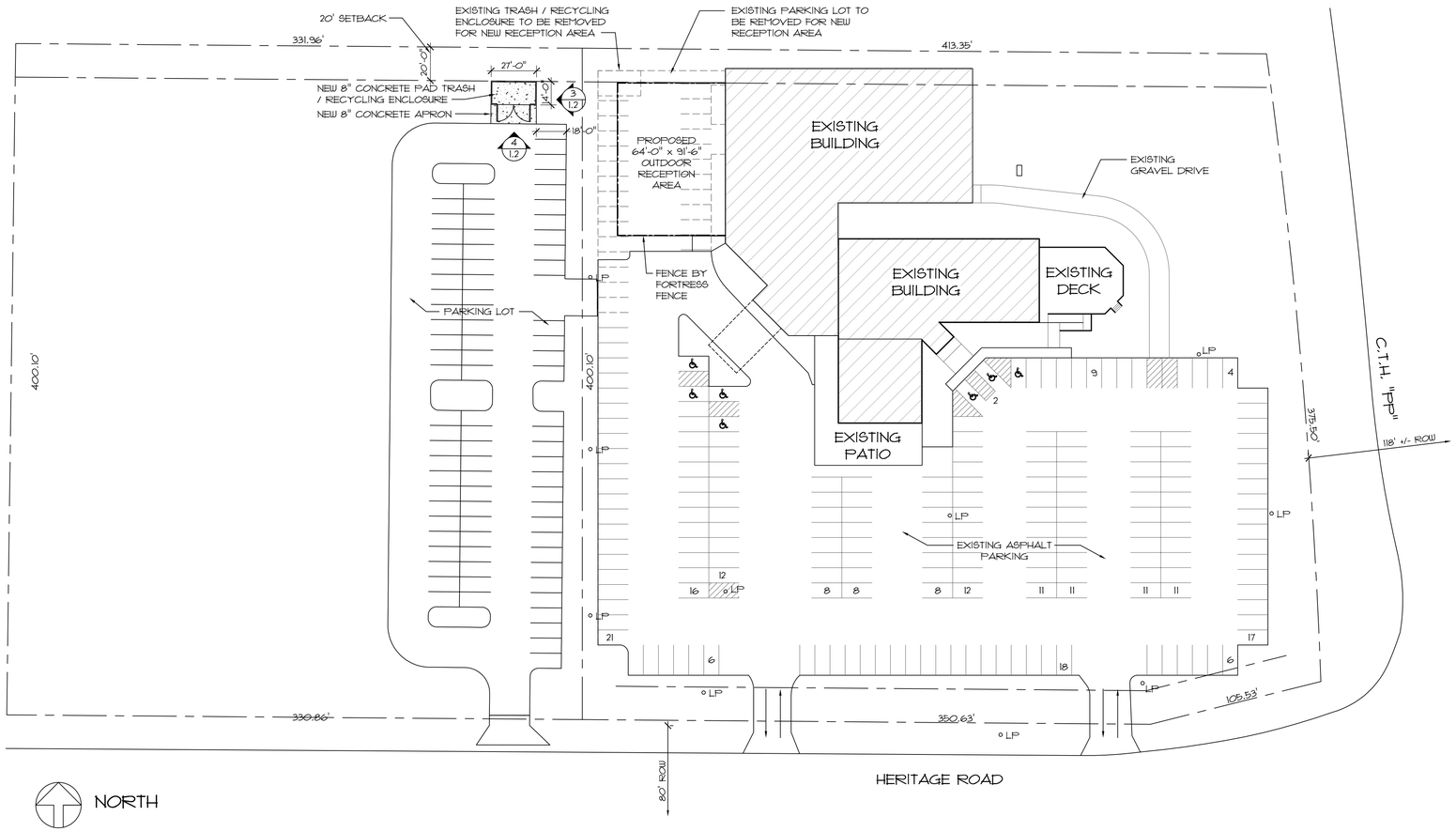

1 SITE PLAN
SCALE: 1" = 40'-0"

PROJECT: ADDITION TO CHICAGO STREET PUB
875 HERITAGE ROAD

OWNER: GREG DECLEENE
875 HERITAGE ROAD
DE PERE, WI 54115

ARCHITECT: ARCHITECTS GROUP LTD
1825 S. WEBSTER AVENUE, STE 202
GREEN BAY, WI 54301

TOTAL AREA OF SITE: 173,372 S.F.
EXISTING IMPERVIOUS SURFACE: 113,815 S.F.
PERCENTAGE OF OPEN SPACE: 34.4%

PARKING REQUIRED:
AREA OF BUILDING: 25,253 S.F.
EXISTING DECK: 1,863 S.F.
EXISTING PATIO: 2,355 S.F.
NEW OUTDOOR RECEPTION: 5,856 S.F.
35,327 S.F. GROSS

1 CAR / 200 S.F.
REQUIRED PARKING: 177 SPACES
EXISTING PARKING ON-SITE IN PAVED LOT: 216 SPACES
PROPOSED PARKING ON-SITE IN PAVED LOT: 191 SPACES

DESCRIPTION OF EXTERIOR FINISH MATERIAL:
EXTERIOR WALLS - SPLIT FACE BLOCK WITH SMOOTH FACE COLOR BANDING TO MATCH EXISTING
ROOF - SHINGLE PITCHED ROOF TO MATCH ORIGINAL BUILDING

CONSTRUCTION TYPE: 2B - UNSPRINKLERED

OCCUPANCY: - RESTAURANT - A2 USE GROUP

OCCUPANY CAPACITY OF COMPLEX - 1,695 PEOPLE

SHEET INDEX

0.1 SITE PLAN
1.0 OVERALL FLOOR PLAN
1.2 PARTIAL FLOOR PLAN AND DETAILS
1.3 SCHEDULES AND DETAILS

STATE OF WISCONSIN
DAVID PHILLIPS JOHNSON
A-5401
Green Bay, Wis.
REGISTERED ARCHITECT
4-9-24

CHICAGO STREET PUB
875 HERITAGE ROAD
DE PERE, WI 54115

SITE PLAN

DATE	REVISED	JOB NO.
04/09/24		2024-005
		DRAWN BY
		D.J.B.

SET TYPE
PRELIMINARY
FINAL REVIEW
BID DOCUMENT

ARCHITECTS GROUP LIMITED
1825 South Webster Avenue Suite 202
Green Bay, Wisconsin 54301
www.agl-gb.com
920-432-1232

0.1

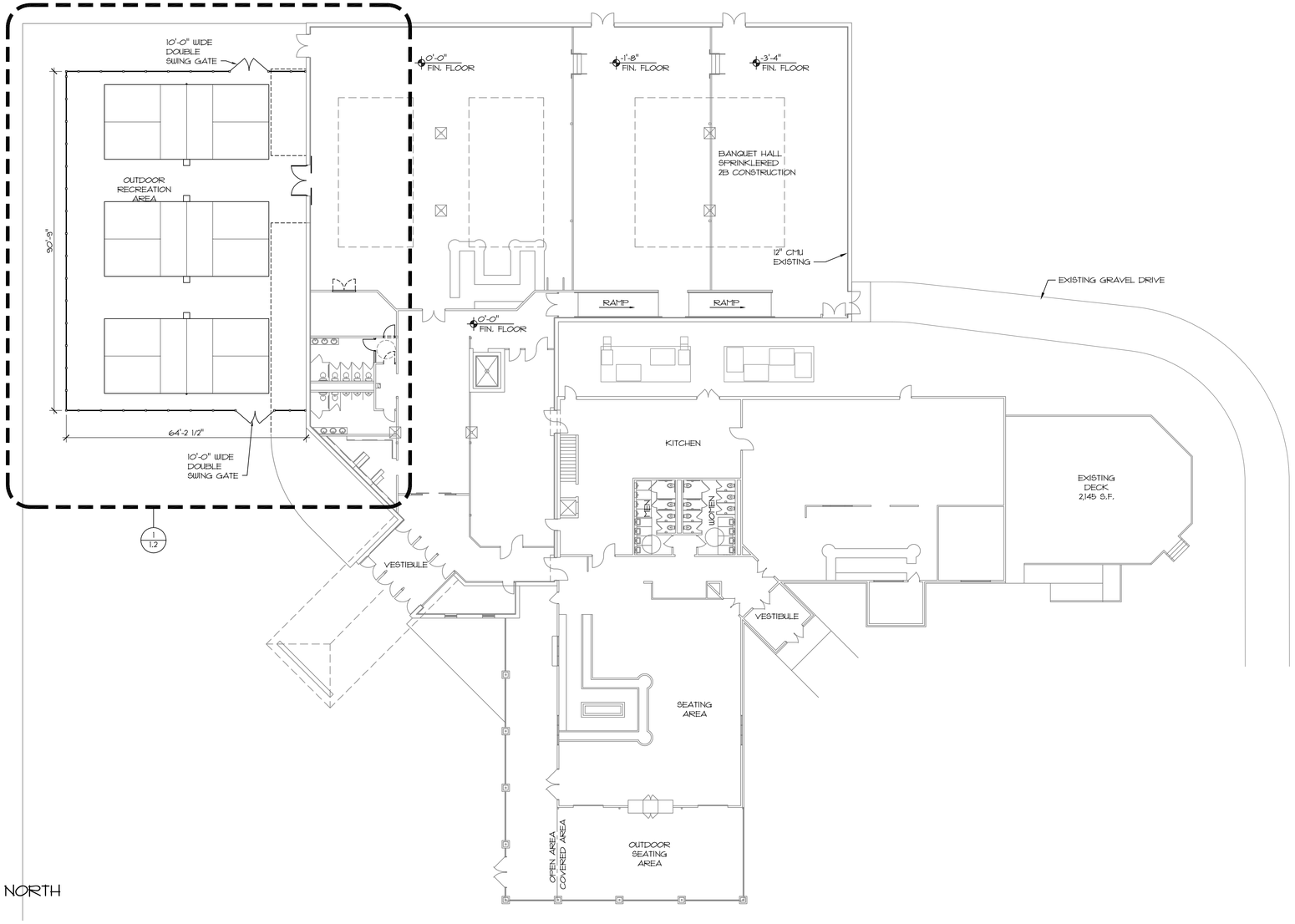

1 EXISTING FLOOR PLAN
SCALE: 1/16" = 1'-0"

CHICAGO STREET PUB
875 HERITAGE ROAD
DE PERE, WI 54115

OVERALL FLOOR PLAN

DATE	REVISED	JOB NO.
04/09/24		2024-005
		DRAWN BY
		D.J.B.

SET TYPE
- PRELIMINARY
- FINAL REVIEW
- BID DOCUMENT

ARCHITECTS GROUP LIMITED
1825 South Webster Avenue Suite 202
Green Bay, Wisconsin 54301
www.agldp.com
920-432-1232

1.0

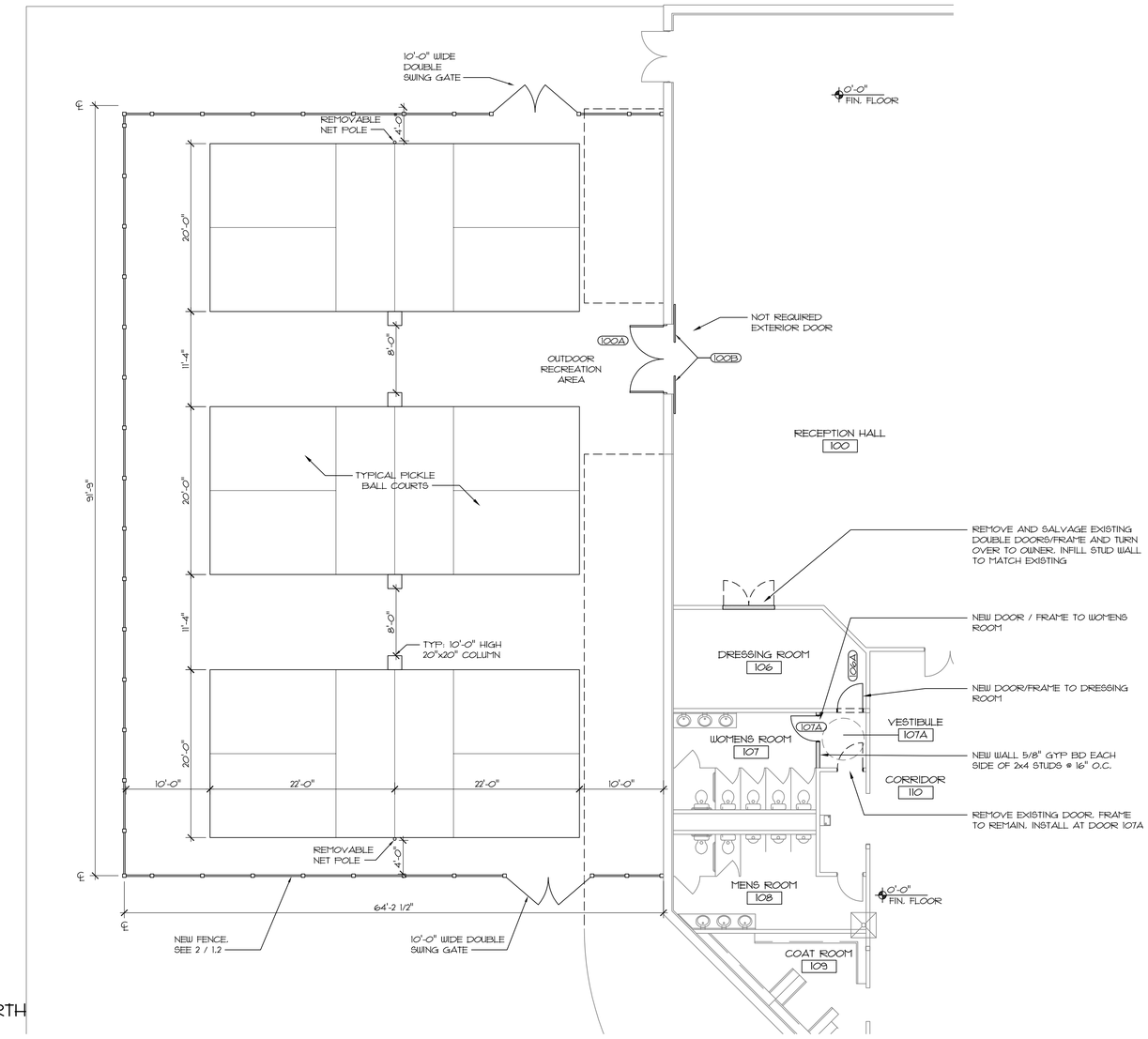

1 PARTIAL FLOOR PLAN
SCALE: 1/8" = 1'-0"

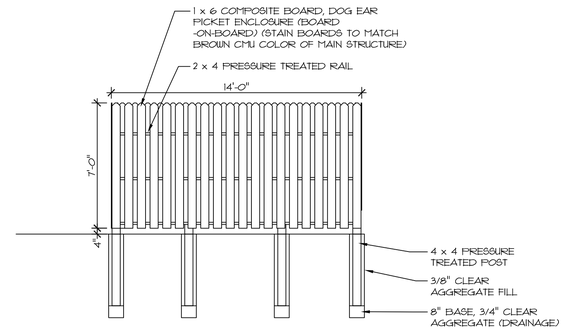

3 TRASH/RECYCLING ENCLOSURE EAST ELEVATION
SCALE: 1/4" = 1'-0"

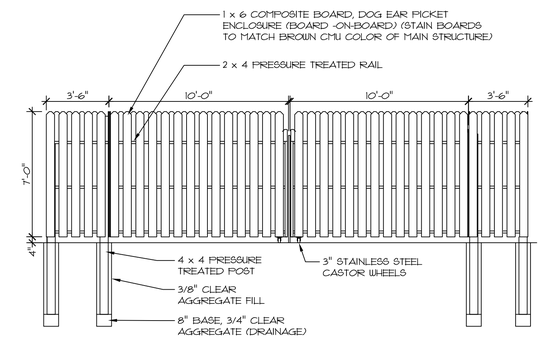

4 TRASH/RECYCLING ENCLOSURE SOUTH ELEVATION
SCALE: 1/4" = 1'-0"

STAIN FENCING FOR NEW TRASH/RECYCLING ENCLOSURE TO MATCH EXISTING BROWN SPLIT-FACE CMU ON BUILDING

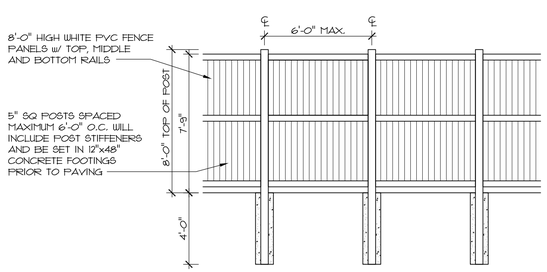

2 TYPICAL WALL DETAIL
SCALE: 1/4" = 1'-0"

CHICAGO STREET PUB
875 HERITAGE ROAD
DE PERE, WI 54115

PARTIAL FLOOR PLAN AND DETAILS

DATE	REVISED	JOB NO.
04/09/24		2024-005
		DRAWN BY
		DJB.

SET TYPE
PRELIMINARY
FINAL REVIEW
BID DOCUMENT

ARCHITECTS GROUP LIMITED
1825 South Webster Avenue Suite 202
Green Bay, Wisconsin 54301
www.agl-gb.com
920-432-1232

1.2

DOOR SCHEDULE

DOOR (1 3/4" UNLESS NOTED)					FRAME				FIRE RAT'G	HDWR GROUP	REMARKS
NO.	TYPE	MATERIAL	SIZE	GLASS	MAT'L	DETAILS		TYPE			
						HEAD	JAMB				
100A	B	ALUMINUM	(2) 4'-0" X 7'-2"	1" TEMP.	ALUMINUM	1 / 1.3	1 / 1.3 SIM.	2		1	
100B	A	WOOD	(2) 4'-0" X 7'-0"			1 / 1.3				2	
106A	C	WOOD	3'-0" X 7'-0"		H.M.	2 / 1.3	2 / 1.3 SIM.	1		3	
107A		WOOD	3'-0" X 7'-0"		H.M.	2 / 1.3	2 / 1.3 SIM.	1			REUSE EXISTING DOOR

ROOM FINISH SCHEDULE

RM#	ROOM NAME	FLOOR	BASE	WALLS				CEILING	CL'G HGT	FINISH NOTES
				N	E	S	W			
100	RECEPTION HALL	EX.	EX.	EX.	EX.	EX.	EX.	EX.		PAINT AT DOOR INFILL
106	DRESSING ROOM	EX.	EX.	P.G.B.	EX.	EX.	EX.	EX.		
107	WOMENS ROOM	EX.	EX.	EX.	P.T.	EX.	EX.	EX.		
107A	VESTIBULE	EX.	EX.	EX.	EX.	EX.	P.G.B.	EX.		
108	MENS ROOM	EX.	EX.	EX.	EX.	EX.	EX.	EX.		

LEGEND

EX. - EXISTING
P.G.B. - PAINTED GYPSUM BOARD
P.T. - PORCELAIN TILE

DOOR TYPES

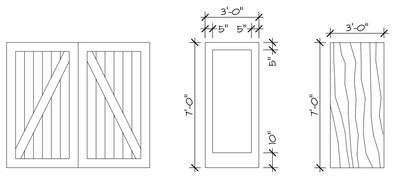

A — WOOD SLIDING BARN DOOR

B — ALUMINUM w/ TEMP. 1" INSUL. GLASS

C — S.C. WOOD MATCH EXISTING

DOOR HARDWARE:

SET 1
- 3 PR BALL BEARING HINGES 4 1/2 x 4 1/2
- 2 CLOSERS w/ HOLD OPENS
- 2 PUSH BARS
- 2 PULLS
- 1 PR FLUSH BOLTS
- 1 RIM KEY CYLINDER WITH THUMB BOLT TURN
- 1 - 5" ADA THRESHOLD
- 1 SET WEATHERSTRIPPING BY ALUMINUM DOOR COMPANY

SET 2
- 1 BARN DOOR OVER TRACK FOR 2 LEAFS
- 2 PULL HANDLES
- 2 STOPS
- FLOOR GUIDE

SET 3
- 1 1/2 PR BALL BEARING HINGES 4 1/2 x 4 1/2
- 1 OFFICE LOCK
- 1 WALL STOP

FRAME TYPES

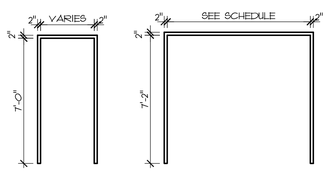

1 — HOLLOW METAL DRYWALL FRAME KNOCKDOWN TYPE SEE SCHEDULE FOR FIRE RATING

2 — ALUMINUM THERMAL BREAK FRAME

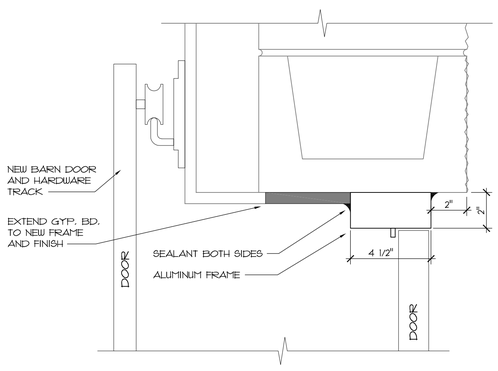

1 HEAD (JAMB SIMILAR)
SCALE: 3" = 1'-0"

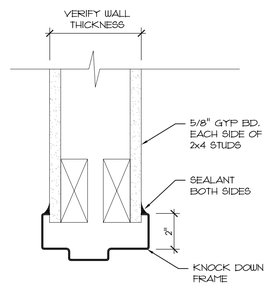

2 HEAD (JAMB SIMILAR)
SCALE: 3" = 1'-0"

CHICAGO STREET PUB
875 HERITAGE ROAD
DE PERE, WI 54115

SCHEDULES AND DETAILS

DATE	REVISED	JOB NO.
04/09/24		2024-005
		DRAWN BY
		D.J.B.

SET TYPE
- PRELIMINARY
- FINAL REVIEW
- BID DOCUMENT

ARCHITECTS GROUP LIMITED
1825 South Webster Avenue Suite 202
Green Bay, Wisconsin 54301
www.agl-gb.com
920-432-1232

1.3